GENERAL MEASURE

GM8892

User's Manual

GM8892-VER120101

48019020211000

©2012， Shenzhen General Measure Technology Co., L reserve all copyright.

Without permission from Shenzhen General Measure Technology Co., Ltd， Any corporations or person must not copy, spread, record or translate into other language by any forms.

Our company reserved the right to update user's manual without additional notice to make perfect for customers. Thus please visit our website or contact with our service person to get update information.

Website：http://www.szgmt.com

Foreword

All of staffs from Shenzhen General Measure Technology Co., Ltd appreciate that you buy GM8895 Remote Display. In order to ensure your installation and wiring correctly, and take full of advantage on capability and function of the remote display, please read the user's manual seriously and keep it properly for reference in the future.

CONTENT

1. General Instructions.....1
1.1 Specification..... 1
1.2 Front panel illumination.....2
2. Installations..... 3
2.1 Communication terminals setting.....3
2.2 Mirror function..... 4
2.3 Communication address setting.....4
2.4 Wires connection….....5
2.5 Remote display fixing…… …..8
3. Working Mode.....9
3.1 Normal display mode…… …9
3.2 Mirror function mode……...10
4. Communication protocols.....12
5. Error Messages……...30
6. Dimension..... 31

1. General Instructions

GM8892 Remote display is terminal display instrument for various weighing equipments, which adopts MCS51 series sing chips as controlling chip, ultrahigh LCD lights and sign instruction elements, thus to make weighing data and sign to display immediately and clearly. The remote displays possess nice stainless shell and detachable sunlight shelter, therefore to show clearly in Sun.

1.1 Specification

1. Temperature ：-10~40℃
2. Humidity ：95%R.H
3. Power supply：AC90V~260V 50-60Hz
4. Data input ：RS232/485, 0-20mA current loop.
5. Adaptable indicator data form: AD-4321, AD-4323, TOLEDO, Fairbanks, R2500, UMC600, GSE50series, Rinstrum, Fidelity, WI-125, WI-127, DF1500 and so on.
6. Installation Dimensions：

578mm×210mm×62mm (without sunlight shelter)
582mm×225mm×200mm (with sunlight shelter)

1.2 Front panel illumination

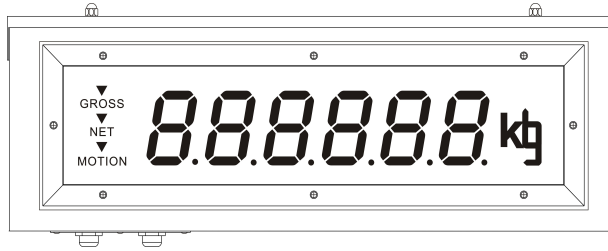

Weighing characters sent by indicators are shown in the middle of screen, including decimal point and minus sign.

The left status instructing lights:

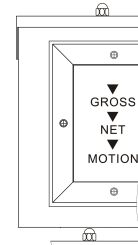

GROSS: Light up for gross weight.

NET: Light up for net weight.

MOTION: Light up for motion status.

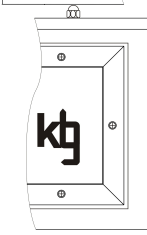

Units indicators:

lb: Weight unit is pound.

Kg: Weight unit is kilogram.

t : Weight unit is ton.

The left cable plug connection:

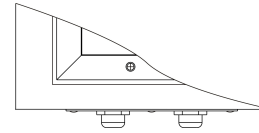

GM8892 remote display has two cable plus to connect with outside by waterproof terminals The right one for signal input and the left one for power supply.

2. Installations

2.1 Communication terminals setting

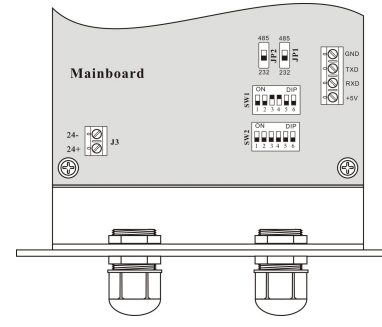

GM8892 Remote display has three kinds communication mode: RS232/485,and 0～20mA current loop. Before installation, please set the communication mode by following instruction:

Through defining dip switches SW1, JP1 and JP2 to set communication mode. Please power again to make new initialization effective.

1. RS232 mode:

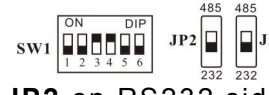

Set **SW1 (red)** as right illustration, and dial **JP1 and JP2** on RS232 side.

2. RS485 mode:

Set **SW1 (red)** as right illustration, and dial **JP1 and JP2** on RS485 side.

3. 0～20mA Current Loop**:**

Set the SW1 as right illustration.

Please note: Please run GM8892 remote display first at 0~20Ma current loop communication mode, then start the connected weighing indicators.

2.2 Mirror function

Weighing value can be displayed in reversed format to suit special requirement.

Push SW2 switch（blue switch）D1 to ON, Then power on again, weighing value will be reversed to display.

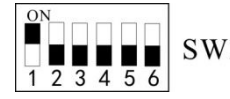

2.3 Communication address setting

Through defining SW2 switch (blue switch) D3、D4、D5、D6 to set communication address. After that, power must be on again. Near number side is defined 0, and near “ON” side is defined 1. The following is address table:

D3	D4	D5	D6	Display Address
0	0	0	0	0
0	0	0	1	1
0	0	1	0	2
…	…	…	…	…
1	1	1	1	15

For example: If present SW2 switches are same as right Diagram, the current remote Display address is “3”.

Note: SW2 switches D2 function is reserved by manufactory , and must be in OFF status in any case to ensure remote display run properly.

When Remote Display address is “0”, it works in single communication mode, and address is no use for communication; while the address is not “0”, it works in multiple communication mode, and address should be matched when communication.

2.4 Wires connection

GM8892 Remote display has power wires and signal wires outside, which had better to be wiring separately to connect with inside main board by waterproof terminals.

Power wires connection

There are two kinds of power box connection, which user can select one of them in actual field.

(1) Fix power box on the bottom of GM8892 remote display. When the holes of power box are located in same place with the holes of the bottom, please screw them tightly. See following illustration①.

(2) User also can put the power box in any other place. See following illustration②.

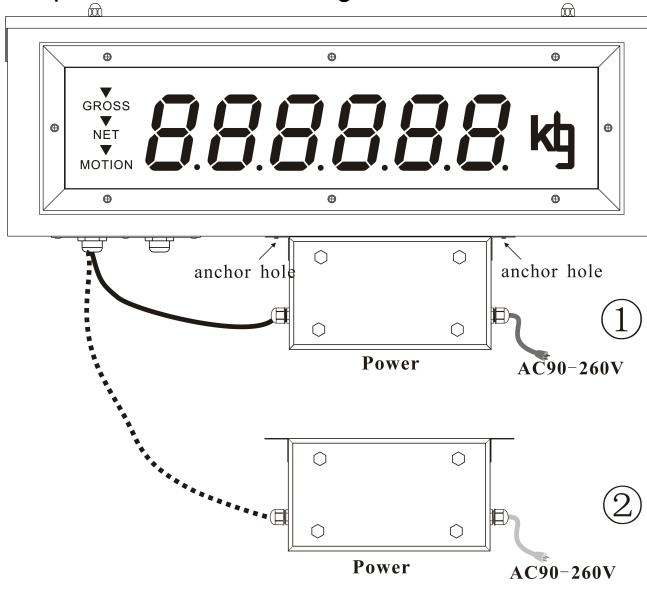

The following is inside wires connection between power box and remote display:

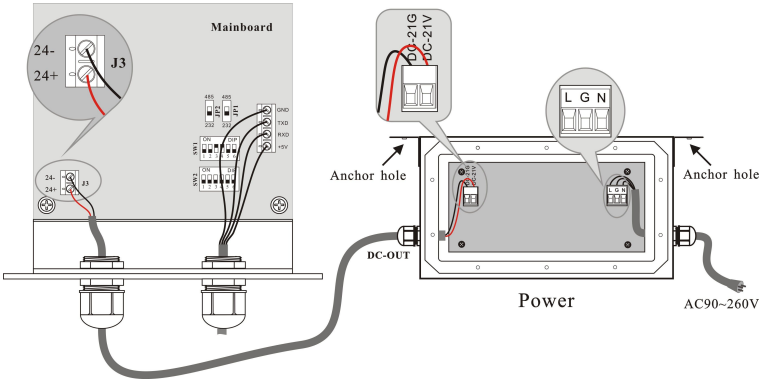

Communication Terminals Connection:

The connection between the indicator and GM8892 remote display are different according to different communication mode. Please refer following illustration:

（1）RS232 communication mode

The following is connection diagram:

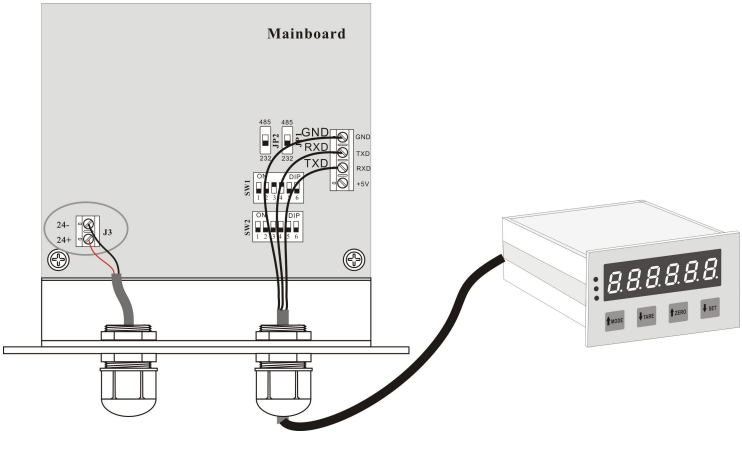

（2）RS485 communication mode

The following is connection diagram:

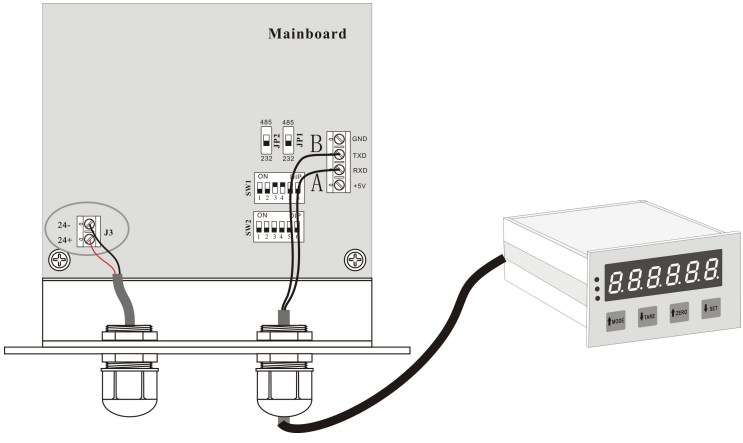

（3）0～20mA Electric current loop

The following is connection diagram:

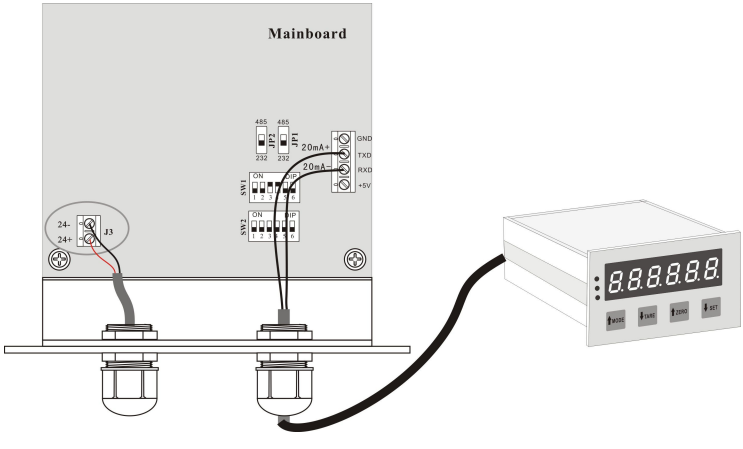

2.5 Remote display fixing

GM8892 Remote display should be fixed on wall or strong metal stand. Please refer following instruction to fix hanging board at first. Suggest use M6 dilatants to fix hanging board on wall.

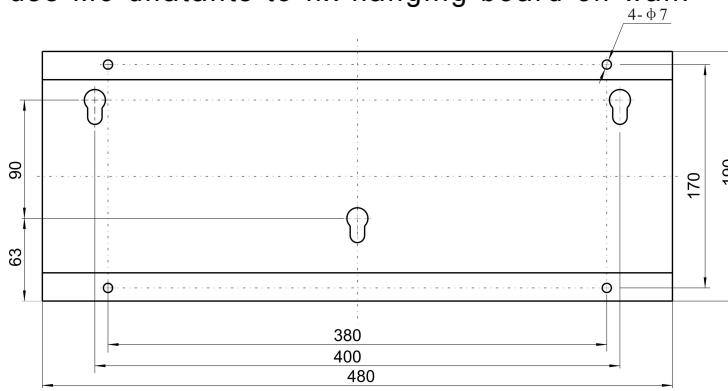

Then put remote display on hanging board and screw tightly when is steady. See following illustration:

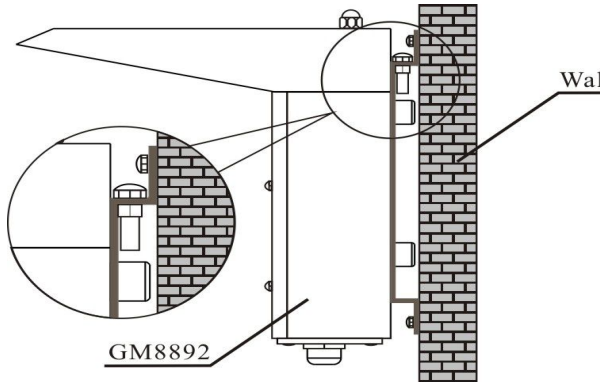

3. Working Mode

3.1 Normal display mode

1. When power on，it will run self-test at first. Main display twinkle numbers “**9.9.9.9.9.9.**” and “**0.0.0.0.0.0.**” at one second alternation, and end at “**0.0.0.0.0.0.**”.

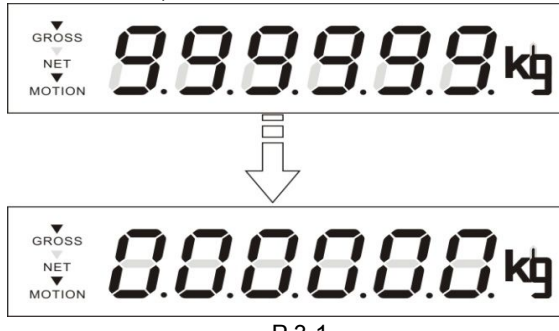

P 3-1

2. When GM8892 Remote display connects with the indicator properly, and can receives weighing data from the indicator, GM8895 will display the current weighing data within some time.

For example, if current weighing data is net weight 1980Kg, then remote display will show as following:

P 3-2

Note: if the connection is not correct, or indicator hasn’t received weighing value, so GM8892 will show “------”.

P 3-3

3.2 Mirror display mode

If Mirror Display switch is ON, all weighing value will be reversed on display.

The following illustration indicates above corresponding mirror display:

1. P 3-1 corresponding mirror display as follows:

P 3-4

2. P 3-2 corresponding mirror display as follows:

P 3-5

3. P 3-3 corresponding mirror display as follows:

P 3-6

If weight value is negative,the left will show minus sign“ — ”:

If weighing value flow over, the display will show “--O---”:

For examples:

1) Gross weight, Motion, Weighing value is 6412.5 Pounds：

2) Net weigh, Stable, Weighing value is 364 Pounds：

3）Net Weight, Stable, Weighing value is 1980 kg：

4） Net Weight, Motion, Weighing value is -7.3 kg:

4. Communication protocols

GM8892 Remote display can connected with various weighing indicators such as AD-4321, AD-4323, TOLEDO, Fairbanks, R2500, Rinstrum, UMC600, GSE50series, GSE60 series, WI-125, WI-127,DF1500 etc, and possess auto-recognized function for baud rate and communication protocols.

The following communication protocols suit all of communication mode:RS232, RS485(point to point) and 0~20mA current loop.

1. The remote display is terminal display instrument connected with weighing equipment, so only the sign, numbers, decimal point and unit characters can be shown correctly, not to display text characters.
2. Self-adapted baud rate: **2400**, **4800, 9600 and 19200**.

4.1 A&D-4321(A&D-4323)

Header 1	,	Header 2	,	Data(8)	Unit	CR	LF

Here:

Header1:2bytes

OL —— Overflow，**O=0x4F L=0x4C**

ST —— Stable，**S=0x53 T=0x54**

US/UN——Unstable，**U=0x55 S=0x53 N=0x4E**

, —— **0x2C**

Header2：2bytes

NT —— Net weigh mode，**N=0x4E T=0x54**

GS —— Gross weight mode，**G=0x47 S=0x53**

TR —— Gross weight，**T=0x54 R=0x52**

Data（8）：

8 digit weighing data（**ASCII**），including positive/negative sign, decimal point, space and **0~9. '+' = 0x2B '-' =0x2D** Space**=0x20** Decimal point**=0x2E**

Unit:2bytes

Kg/kg——kilo grams **K=0x4B g=0x67 k=0x6B;**

Lb/lb——pounds **L=0x4C b=0x62 l=0x6C**

t —— ton **=0x20 t=0x74**

4.2 TOLEDO&Fairbanks R2500

STX	A	B	C	Weight (6)	Tare (6)	CR

Here：

STX——Start of transmission character (0x02)

A —— Status character **A**

B —— Status character **B**

C —— Status character **C**

Weight(6)——Weighing value show six digits without decimal point or 5 digits with decimal point.

Tare——Tare value show six digits without decimal point or 5digits with decimal point.

CR —— Carriage Return 0x0D

Status character A：

Bits0,1,2 is decimal point position，Bits3,4 is the grades factor:

Bit	X00	X0	X	X.X	X.XX	X.XXX	X.XXXX	X.XXXXX
0	0	1	0	1	0	1	0	1
1	0	0	1	1	0	0	1	1
2	0	0	0	0	1	1	1	1

Bit	Factor **1**	Factor **2**	Factor **5**
3	**1**	**0**	**1**
4	**0**	**1**	**1**
5		Always logic **1**	
6		Always logic **0**	
7		Odd/even bit	

Status Character B:

Bit	Status
0	Gross＝**0** Net ＝**1**
1	+ ＝**0** - ＝**1**
2	Normal ＝**0** Overflow＝**1**
3	Stable ＝**0** Motion ＝**1**
4	Pounds **(lb)**＝**0** Kilo Grams(kg)＝**1**
5	Always logic **1**
6	Norma＝**0** **Power up=1**
7	Odd/Even bit

Status Character C:

Bit	Status
0	Always logic **0**
1	Always logic **0**
2	Always logic **0**
3	Norma＝**0** print enabled＝**1**
4	Always logic **0**
5	Always logic **1**
6	Normal＝**0** Tare enabled＝**1**
7	Odd/Even bit

4.3 UMC 600

STX	DATA (8)	L/K	G/N	STAT	CR	LF

Here：

STX —— Start of transmission character (0x02)

DATA——Eight weighing characters， the first character is negative sign or space. The weighing characters include the decimal point.

L/K —— Pounds or kg sign， **L=0x4C K=0x4B**

G/N —— Gross/Net sign **G=0x47 N=0x4E**

STAT——'**O**' for overflow， '**M**' for motion or space， **O=0x4F M=0x4D**

CR —— Carriage Return 0x**0D**

LF —— Line Feed 0x**0A**

4.4 GSE 50 Series (GSE 60 Series)

STX	Weight (8)	Spc	Unit	Spc	Mode (5)	Stat	CR	LF

Here:

STX——Start of transmission character (0x02). STX can be omitted if unit is 5bytes.

Weight(8)——8bytes weighing value, including decimal point and sign

Spc —— Space 0x20;

Unit —— 2bits, 'kg'or'lb'; If unit is 5bytes, the last characters will be space.

Mode ——5bytes mode.‘Gross’（0x47 0x72 0x6F 0x73 0x73）、‘Net’（0x54 0x61 0x72 0x65 0x20 0x20）、‘Tare’（0x4E 0x65 0x74 0x20 0x20）

Stat —— Status sign: ‘S’(0x53) for stable，‘U’(0x55) for under load, ‘O’(0x4F) for overflow，‘E’(0x45) for error, ‘M’(0x4D) for motion.

CR —— Carriage Return 0x0D

LF —— Line Feed 0x0A

4.5 WI-125

Space	Mode	Weight (8)	Space	Unit (2)	Space	CR	LF

Here：

Space ——0x20

Mode——‘G’ for gross weight,‘N’ for net weight

Weight(8)——8bytes weighing characters, including decimal point and sign.

Unit——2bits, ‘lb’(0x6C 0x62) for pounds ‘kg’(0x6B 0x67) for kilograms

CR —— Carriage Return 0x0D

LF —— Line Feed 0x0A

4.6 WI-127

Space	Mode	Weight (5&7)	Space	Unit	Space	CR	LF

Here:

Space ——0x20

Mode——‘G’ for gross weight,‘N’ for net weight.

Weight(5&7)——5 or 7bytes weighing value, including decimal point and sign.

Unit ——2bits, ‘lb’(0x6C 0x62) for pounds , ‘kg’(0x6B 0x67) for kilograms

CR —— Carriage Return 0x0D

LF —— Line Feed 0x0A

4.7 DF1500 Series

STX	Pol	Weight (7)	Spc	Unit	Spc	Mode	Spc	Stat	CR	LF

Here:

STX —— Start of transmission character (0x02)

Pol——Sign,‘-’0x2D for negative, 0x20 for positive

Weight(7)——7bits weighing value, including decimal point.

Spc —— 0x20

Unit ——2bits, ‘KG’(0x4B 0x47) for kilograms or ‘LB’(0x4C 0x42) for pounds.

Mode ——2bits,gross weight/net weight, ‘G’ for gross weight or ‘N’ for net weight

Stat——Status byte.‘O’for overflow , ‘M’for motion.

CR —— Carriage Return 0x0D

LF —— Line Feed 0x0A

4.8 Rinstrum A protocols

STX	SIGN	Weight (7)	STATUS	ETX

Here:

STX —— Start of transmission character (0x02)

SIGN——'-'0x2D for negative, 0x20 for positive

Weight(7)——7bytes weighing value with decimal

STATUS——1bit, G(0x47) / N(0x4E) / U(0x55) / O(0x4F) / M(0x4D) / E(0x45) mean Gross weight / Net weight / Underload / Overload / Motion / Error

ETX —— End of transmission character (0x03)

4.9 Rinstrum C protocols

STX	SIGN	Weight (7)	S1	S2	S3	S4	Units (3)	ETX

Here:

STX——Start of transmission character (0x02)

SIGN——'-'0x2D for negative, 0x20 for positive

Weight(7)——7bits weighing value with decimal

S1——Status sign, G(0x47) / N(0x4E) / U(0x55) / O(0x4F) / E(0x45) mean Gross weight / Net weight / Underload / Overrload / Error

S2——Status sign,'M' for motion,space for stable.

S3——Status sign, 'Z' for center of zero, space for non-zero

S4——1bit, no use

Units——3bits units , _kg(0x20 0x6B 0x67)、_lb(0x20 0x6C 0x62)、_ _t(0x20 0x20 0x74) or _ _g(0x20 0x20 0x67)

ETX —— End of transmission character (0x03)

4.10 Rinstrum PC protocols

STX	TEXT (8)	SPC	Address（2）	ETX

Here:

STX —— Start of transmission character (0x02)

TEXT(8)——8bits weighing characters including decimal point and sign characters. When the first character is 'L'(0x4C), the remote display timeout is disabled, which means that the message will remain on the display until new data is sent.

SPC —— 0x20

Address (2) —— 2bits. The address is defined by SW2 switch.

ETX —— End of transmission character (0x03)

4.11 Bilanciai D800 Cb protocols

$	S	Weight (5)	CR

Here:

S —— Start of transmission character (0x02)

S —— Status sign. 'S' is 0 for stable, 'S' is 1 for motion, 'S' is 3 for error weighing value of overflow or negative data.

Weight(5)——5bits weighing characters, including decimal point and sign.

CR —— Carriage Return 0x0D

4.12 HBM WE2107 EOP6 protocols

Str	Weight（6）	G/N	Spc(2)	Unit(3)	CR	LF

Here:

Str——Start of transmission character (0x02)
'-'for negative, space for positive

Weight(6)——6bits weight value with decimal.

Spc (2) —— 0x20

G/N ——Weighing status, 'G' for gross weight. 'N' for net weight.

Units——3bits,remote display show unit when status is steady: _Kg/kg(0x20 0x4B/0x6B 0x67) or _lb(0x20 0x6C 0x62),3bytes space for motion.

CR —— Carriage Return 0x0D

LF —— Line Feed 0x**0A**

4.13 Gedge C2 protocols

STX	Weight (7)	S1	S2	S3	Ignore	Spc（2）	ETX

Here:

STX —— Start of transmission character (0x02)

Weight(7)——7bits weight value with decimal.

S1——Weighing status sign, 'G' for gross weight. 'N' for weight.

S2——Status sign, 'M' for motion, 'S' for stable.

S3——Status sign, I/O/U mean Normal data / Overload / Underload.

Ignore——1byte，reserved

Spc——2bytes space

ETX —— End of transmission character (0x03)

4.14 Gedge C3 protocols

STX	Gross (8)	Tare (8)	Net (8)	S1	S2	S3	Ignore	Spc (2)	ETX

Here:

STX——Start of transmission character (0x02)

Gross(8)——8bytes gross weight, display gross weight when S1 is 'G'.

Tare(8)——8bytes tare weight, reserved.

Net(8)——8bytes net weight, display net weight when S1 is 'N'.

S1——Weighing status sign, 'G' for gross weight. 'N' for net weight.

S2——Status sign, 'M' for motion, 'S' for stable.

S3——Status sign, I/O/U mean Normal data / Overload / Underload.

Ignore——1byte，reserved

Spc——2bytes space

ETX —— End of transmission character (0x03)

4.15 Protocols NO.1

STX	Status	Sign	Weight（7）	Unit（3）	ETX

Here:

STATUS——1byte, G(0x47) / N(0x4E) / U(0x55) / O(0x4F) / M(0x4D) / E(0x45) mean Gross / Net / Underload / Overrload / Motion / Error

STX —— Start of transmission character (0x02)

SIGN ——Weighing sign,'-'0x2D for negative data, space for positive data

Weight —— 7bits weight value with decimal.

Unit —— 3bytes, reserved.

ETX —— End of transmission character (0x03)

4.16 Protocols No.2

STX	Sign	Weight（7）	ETX

Here:

STX —— Start of transmission character (0x02)

SIGN ——Weighing sign,'-'0x2D for negative data, space for positive data

Weight(7)——7bits weight value with decimal.

ETX —— End of transmission character (0x03)

4.17 Protocols No.3

Adress（2）	Command（2）	Register（4）	Semicoion	Data（8）	Teriminator（2）

Here：

Address——2bits register address, defined by SW2 switch.

Command——2bits, must be 12(0x31 0x32).

Register——4bits, must be 000E(0x30 0x30 0x30 0x2E)

Semicoion——1bit, must be 0x03B.

Data——8 weight value, including sign and decimal point.

Terminator——2bits end of transmission character (0x0D 0x0A).

4.18 Protocols No.4

STX	Weight（7）	Spc	Unit（5）	Spc	S1	Spc	Con（6）	Spc	Ignore	CR	LF	ETX

Here:

STX —— Start of transmission character (0x02)

Weight(7)——7bits weight value, including decimal point and sign.

Spc——Space 0x20

Unit(5)——5bits,no use by the remote display.

S1——1bit，'G' or 'N' for gross or net weight.

Con——5bits,no use by the remote display.

Ignore——1bit, reserved.

CR —— Carriage Return 0x0D

LF —— Line Feed 0x**0A**

ETX —— End of transmission character (0x03)

4.19 Protocols No.5

STX	Weight (8)	S1	S2	S3	Ignore	Spc (2)	ETX

Here:

STX —— Start of transmission character (0x02)

Weight(8)——8bits weight value, including decimal point and sign.

S1——'G' or 'N' for gross weight or net weight.

S2——'M' for motion, 'S' for stable.

S3——I,O,U mean Normal data / Overload / Underload.

Ignore——1byte，reserved

Spc——2bytes space

ETX —— End of transmission character (0x03)

4.20 Protocols No.6

Header（2）	,	Sign	Weight（5）	CR	LF

Here:

Header(2) ——**WT:**normal work； **OT:**overflow

, ——0x2C

Sign——1byte for sign

Weight(5)——5bytes weighing characters, including decimal point

CR —— Carriage Return 0x0D

LF —— Line Feed 0x0A

4.21 Protocols No.7

Weight（8）	Spc	Units（5）	Spc	Mode（5）	S1	S2	CR	LF

Here:

Weight(8)——8bytes weighing characters, including decimal point and sign.

Spc——Space 0x20

Unit(5)——5bytes,reserved,no use by the remote display.

Mode——5bytes Mode, “Gross”、“Net”or“Tare”, If less than 5bytes, space filled.

S1——1byte, M / S / O / U / E mean Motion / Stable / Overload / Underload / Error

S2——1byte,‘Z’ (0x5A) for center of zero, space for non-zero

4.22 Protocols No.8

STX	Ignore (3)	Sign	Net	Tare	Spc	S1	S2	LF	CR

Here:

STX——Start of transmission character (0x02)

Ignore(3)——3bytes, reserved.

SIGN——Weighing sign, space for positive data, '-'0x2D for negative data,

Net——5bytes net weight or 6bytes net weight, Tare must be 10bytes if net is 6bytes, including decimal point.

Tare——9bytes tare weight or 10bytes tare weight(Net must be 6bytes), reserved.

Spc——2bytes space

CR —— Carriage Return 0x0D

LF —— Line Feed 0x0A

Status S1 and S2 are defined as following:

S1 and S2 are 0~F ASCII code:

S1	S1 Status
0	Tare=0,preset Tare=1 Only in Net mode.
1	Motion=0,Stable=1
2	Not COZ=0,COZ=1
3	Gross=0,Net=1

S2	S2 Status
0	Units=kg
1	Units=g
2	Units=T
5	Weight longer than string,the display show blank

4.23 Protocols No.9

STX	Address	Weight（4）	ETX

Here:

STX —— Start of transmission character (0x02)

Address——1bit, must be defined 1, so SW2 switch should set 1.

Weight(4)——5bits weight value, including decimal point and sign.

ETX —— End of transmission character (0x03)

4.24 Protocols No.10

STX	Address	Text（8）	ENQ

Here:

STX——Start of transmission character (0x02)

Address——1bit, must be defined 2, so SW2 switch should set 2.

Text(8)——8bits weight value, including decimal point and sign.

ENQ —— End of transmission character (0x05)

4.25 Protocols No.11

Ignore（6）	Sign	Spc	Weight（8）	Spc	Unit（3）	CR	LF

Here:

Ignore(6)——6bits, reserved, only can be printed characters.

Sign——Weighing sign, ‘+’(0x2B) for positive data, ‘-’0x2D for negative data.

Spc——Space

Weight(8)——8bits weigh value with decimal.
Units(3)——3bytes, reserved.
CR —— Carriage Return 0x0D
LF —— Line Feed 0x0A

4.26 Protocols No.12

S1	Weight（5&6）	ESC	Ignore	Unit	CR	LF

Here:

S1——N/M/O mean Net weight / Net weighing in center of zero / Center of Zero
Weight(5&6)——5bits or 6bits weight value, including decimal point and sign.
ESC——1byte exit of character, must be 0x1B
Ignore——1byte, reserved.
Unit——1byte. ‘0’ for stable， otherwise no display.
CR —— Carriage Return 0x0D
LF —— Line Feed 0x0A

4.27 Protocols No.13

~	Sign	~	Weight（8）	~	Terminator

Here:

~ ——Non-number characters at any length.
Sign——1bit weighing sign,‘-’0x2D for negative data.
Weight(8)——8bits weight value with decimal.
Terminator——1byte end of transmission character (0x0D or 0x03)

4.28 Protocols No.14

Text（8）	Teminator

Here:

Text(8)——8bits weight value with decimal.

Terminator——1bit end of transmission character (0x0D or 0x03)

4.29 Systec Protocols

Weight（15）	LF	CR

Here:

Weight(15)——15bits weight value with decimal, status character, sign and units. If present weighing data is not enough 15bytes, space will be filled. No.13 character always is space.

LF —— Line Feed 0x0A

CR —— Carriage Return 0x0D

4.30 GM Protocols

STX	ID	Pol	Weight(7)	K/L	G/N	O/M/S	CR	LF

Here:

STX——Start of transmission character (0x02)

ID ——2bits register no.01~15.

Pol——Character, space(0x20) for positive data, '-'0x2D for negative data.

Weight——7bits weight value with decimal point(0x2E).The first character is space(0x20) if no decimal point.

K/L —— Unites，'K' is kg or 'L' is lb.

G/N ——'K' is gross weight , 'N' is net weight.

O/M/S ——Status sign.'O' for Overflow，'M' for motion，'S' for Stable.

4.31 Fidelity Protocol

Data format:

Header 1	,	Header 2	Sign	Data (7)	,	Unit	CR	LF

Here:

Header1:2bits

ST —— Stable sign，**S=0x53** **T=0x54**

US——Unstable sign，**U=0x55 S=0x53**

, —— Separator sign: **0x2C**

Header2：2bits

NT —— Net weigh mode，**N=0x4E** **T=0x54**

GS ——Gross weight mode，**G=0x47 S=0x53**

Sign —— the digits show (0x2D) for negative data and space (0x20) for positive data.

Data（7） —— 7 bits weight value including decimal point(**0x2E**). If there is no decimal point, then the first character is space.

Unit:2bits

kg——kilograms **k=0x6B** **g=0x67 ;**

lb——pounds **l=0x6C** **b=0x62 ;**

t —— ton **=0x20** **t=0x74**

CR —— Carriage Return 0x0D

LF —— Line Feed 0x0A

5. Error Messages

5.1 Weighing Errors

These messages show errors that have occurred during the normal weighing operation.

Error	Description
--U---	Underweight – The weight is below the minimum allowable weight reading.
--O---	Overweight – The weight is above the maximum allowable weight reading.
--E---	Error – The indicator is reporting an error.
-------	No valid data from indicator.

6. Dimension

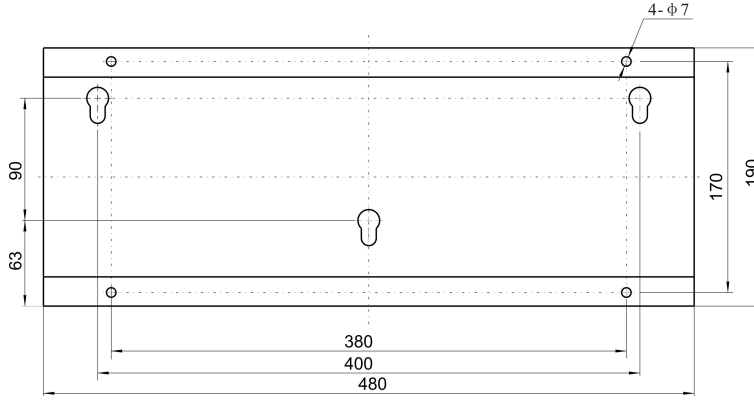

GM8892 Hanging Board Dimensions