GENERAL MEASURE

ChexGo Series

Dynamic Checkweigher



Weasy -- Weighing Easy

Designed for dynamic weighing application

30+years R&D experience in weighing control

ChexGo Series checkweigher with the feature of high speed, accuracy and stable performance can work well in the harsh industrial environment. Assuring the 100% product weighing detection under the law and regulation, it will reduce the customer complains and protect enterprise fame. Whilst replacing the manpower to lower the cost, ChexGo can help you to increase efficiency of the production line and avoid risks.

Easy operation

Accurate weighing

Abundant function

Stable and reliable



Stable, flexible and accurate design

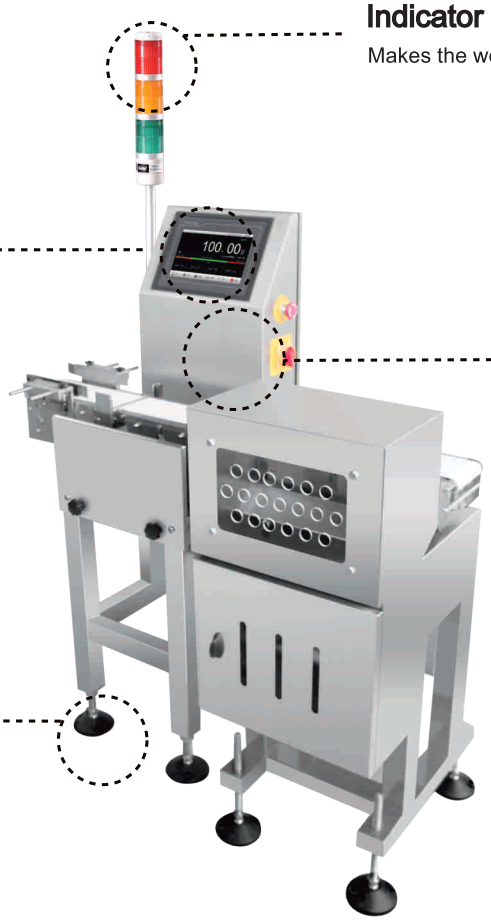

Indicator Light

Makes the weight result more visible.

10-inch touch screen

10-inch color user friendly touch screen and graphical design interface.

Control System

30+ years'experience in inventing and innovating.

Module design for troubleshooting, maintenance and change parts.



Feet

Designed feet for preventing vibration with flexible margin adjustment.

High efficient and better performance

Anti-interference design

Professional circuit design, the weighing control box is passed EMC test, which can resist the power and electromagnet interference and maintain the stable operating.

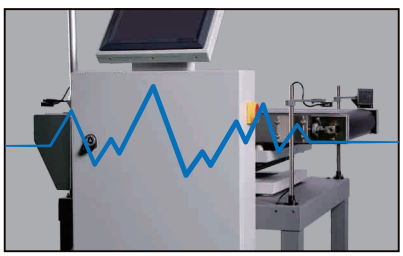

Adjustable material orientation guider

- Ensure the object stable moving;
- Decrease the vibration;
- S304 Stainless steel.

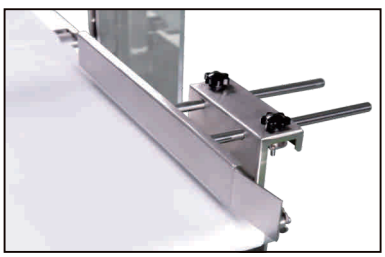

Anti-corrosion paint protection

All control panel is protected by anti-corrosion paint, which is moisture proof, dust proof, insulation and anti-vibration.

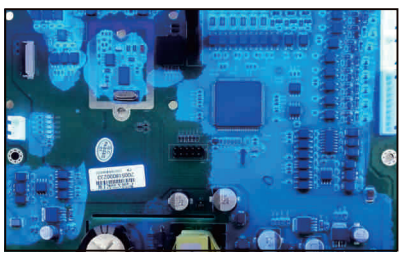

Abundant function, easy integration

- Standard Modbus TCP/IP, RS485 communication
- Support connecting to labeling machine, ink-jet printer
- Support connecting to printer to print weighing data records.

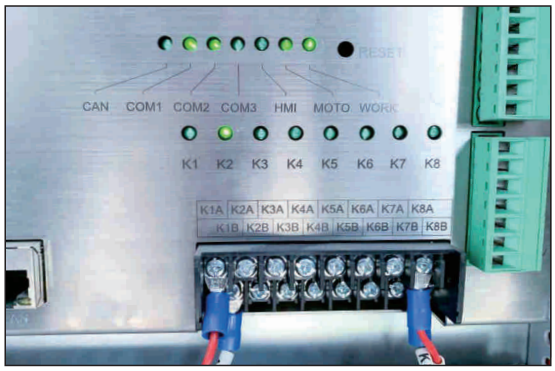

----------		Up separate line
DATE:	2020.6.18	Print date
TIME:	15:31	Print time
PRODUCT CODE:	1	Product code
TARE WT:	0.000kg	Tare value
UP LIM:	0.030kg	Overweight value
REF WT:	8.135kg	Target weight
LOW LIM:	0.030kg	Underweight value
PASS CT:	1	Total pass time
PASS WT:	8.140kg	Total pass weight
PASS AVR:	8.140kg	Average pass weight
PASS RATE:	100.00%	Pass rate
OVER CT:	0	Total overweight time
OVER WT:	0.000kg	Total overweight value
UNDER CT:	0	Total underweight time
UNDER WT:	0.000kg	Total underweight value
TOTAL CT:	1	Total test time
TOTAL WT:	8.140kg	Total test weight
MIN WT:	8.140kg	Minimum weight
MAX WT:	8.140kg	Maximum weight
----------		Down separate line

Printing Function

When communication is set as print and checkweigher is connected to the printer, the weighing data records can be printed on the interface of statistic result or by sending the print order via communication.

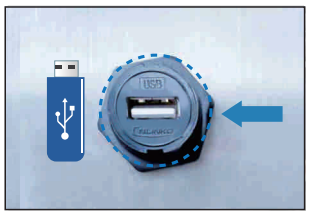

USB Memory Port

- Data acquisition;
- Program update.

Multi-type Rejector

Multi-Rejector option, flap method, swing arm, push type – flexible design.

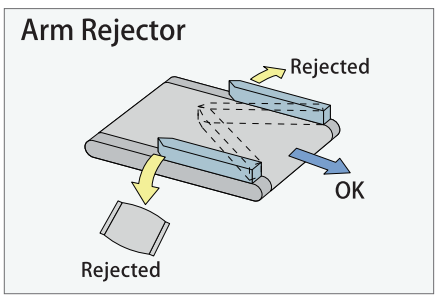

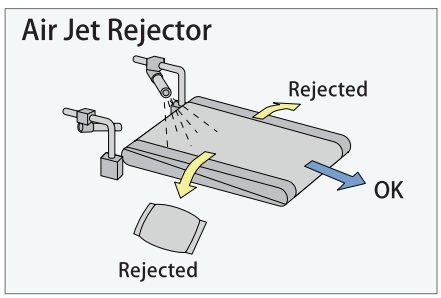

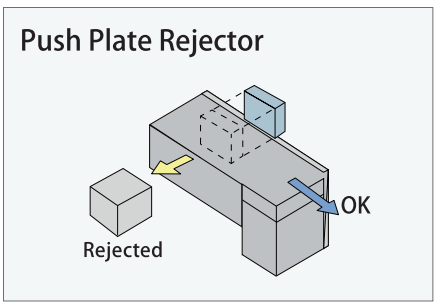

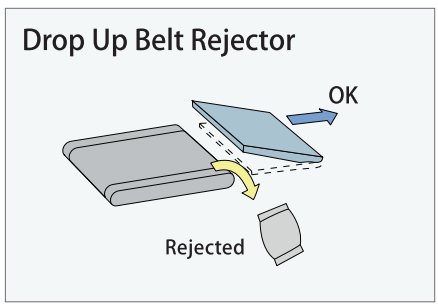

User-friendly design

- 10-inch color user friendly touch screen and graphical design interface. Simple operation without professional training.



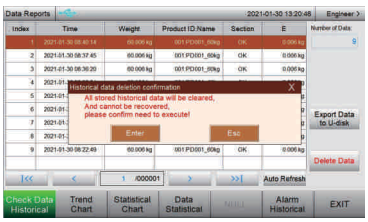

- A million product formula storage. Users/Admin can easy add or delete data.

- Advanced and sophisticated software algorithm makes sure the accuracy, as well as high speed dynamic responses.

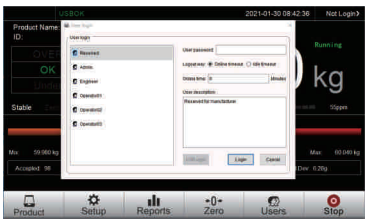

- 3 levels of admin-istration authority for well-organized management.

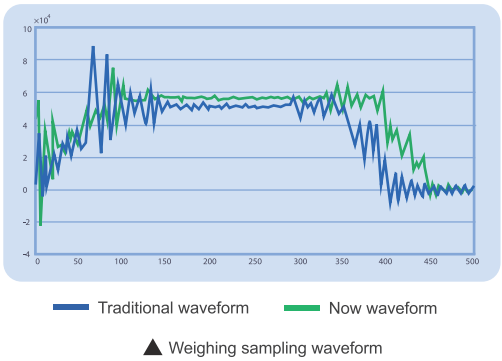

Well-organized data management

- A million data details record including serial number, time and result for admin to check errors. Data summary report can be exported through USB and RS485

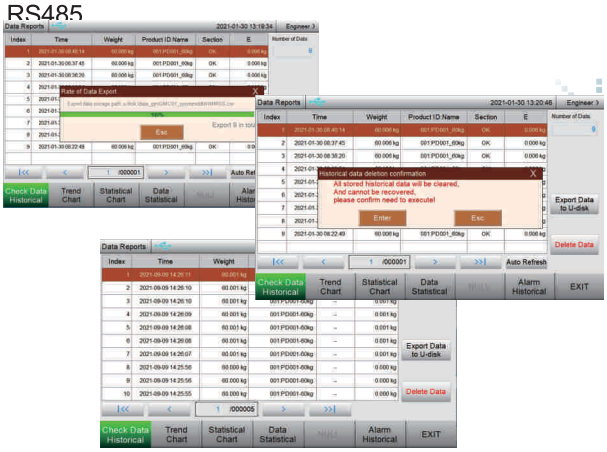

- Weight fluctuation chart reflects the product's weight conditions from the macro prespective.

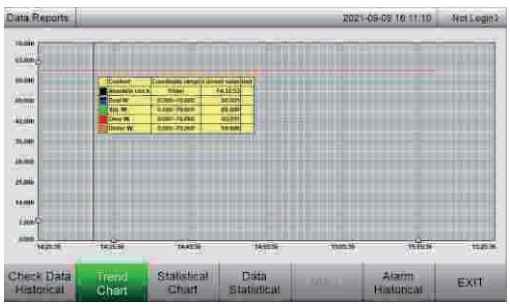

DYNAMIC CHECKWEIGHER

CW-100G

- This product is widely used in pharmaceutical production lines for highest weighing accuracy and repeatability;
- The checkweigher monitor manufacturing efficiencies and provide real-time data on your process;
- Product completeness and trends also provide feedback data to production line;
- It is also used in the application of checking completeness of secondary package to identify any missing items.

Multiple industrial application



Food


Pharmacy



Accessories

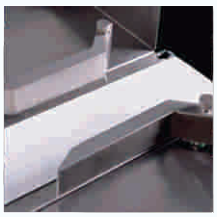

500g
Maximum capacity



±0.1g
Best accuracy



180 Pcs/min
Highest speed



Standard specification

Model	CW-100G
Maximum capacity	500g
Scale division	0.05g
Best accuracy*	±0.1 g
Highest weighing speed*	180 pcs/min
Belt speed	5~60 m/min
Belt size	250×100mm
Weighing platform height *	830±50mm
Belt material	PU (white)
Structure of the material	Carbon steel, SS304 stainless steel (weighing platform)
Alarm light	3-color signal light (Red, yellow, green), Optional buzzer
Display size	10-inch color touch screen
Rejector lineup	Options: swing type, air blow type, push type or lift up type rejector
Power	Single Phase AC-220V ±10%, 50/60HZ ,225W
Operating temperature	0~40℃
IP grade	IP54 ,IP65 Optional

*Depend on the weight, size, and material of test object. Test accuracy: 0.1g at 100pcs/min; 0.3g at 180pcs/min.

Dimensions

Unit:mm

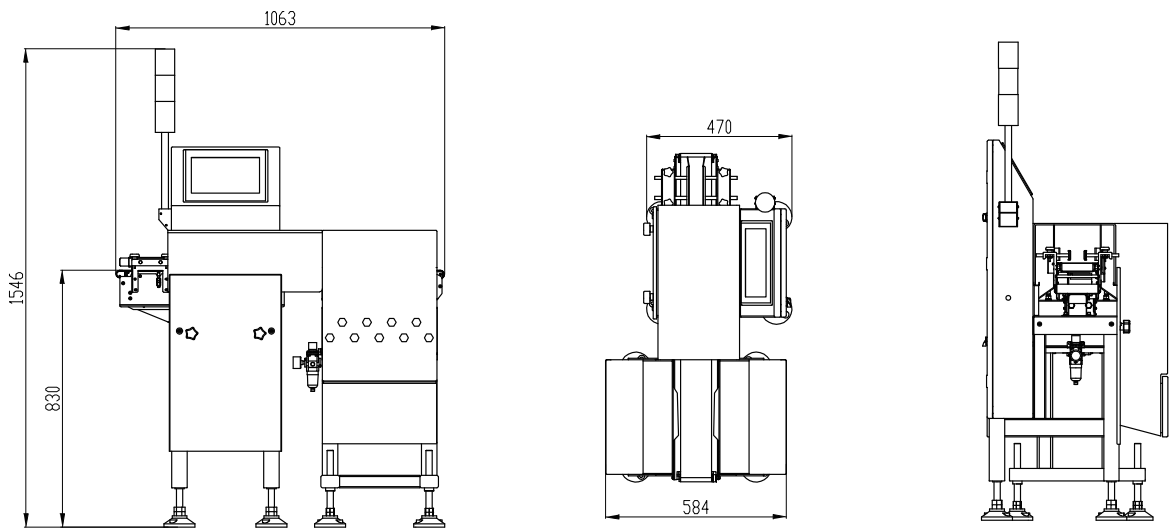

DYNAMIC CHECKWEIGHER

CW-100G Pro

- This product is widely used in pharmaceutical production lines for highest weighing accuracy and repeatability;
- The checkweigher monitor manufacturing efficiencies and provide real-time data on your process;
- Product completeness and trends also provide feedback data to production line;
- It is also used in the application of checking completeness of secondary package to identify any missing items.

Multiple industrial application



Food


Pharmacy



Accessories



500g
Maximum capacity



±0.1g
Best accuracy



300 Pcs/min
Highest speed



Standard specification

Model	CW-100G Pro
Maximum capacity	500g
Scale division	0.05g
Best accuracy*	±0.1 g
Highest weighing speed*	300 pcs/min
Belt speed	10~70 m/min
Belt size	200×150 mm
Weighing platform height*	750±50mm
Belt material	PU (white)
Structure of the material	SS304 stainless steel
Alarm light	3-color signal light (Red, yellow, green), Optional buzzer
Display size	15-inch color touch screen
Rejector lineup	Air blow type
Power	Single Phase AC-220V ±10%, 50/60HZ,375W
Operating temperature	0~45°C
IP grade	IP65

*Depend on the weight, size, and material of test object. Test accuracy: 0.1g at 120pcs/min | 0.2g at 200pcs/min

Dimensions

Unit:mm

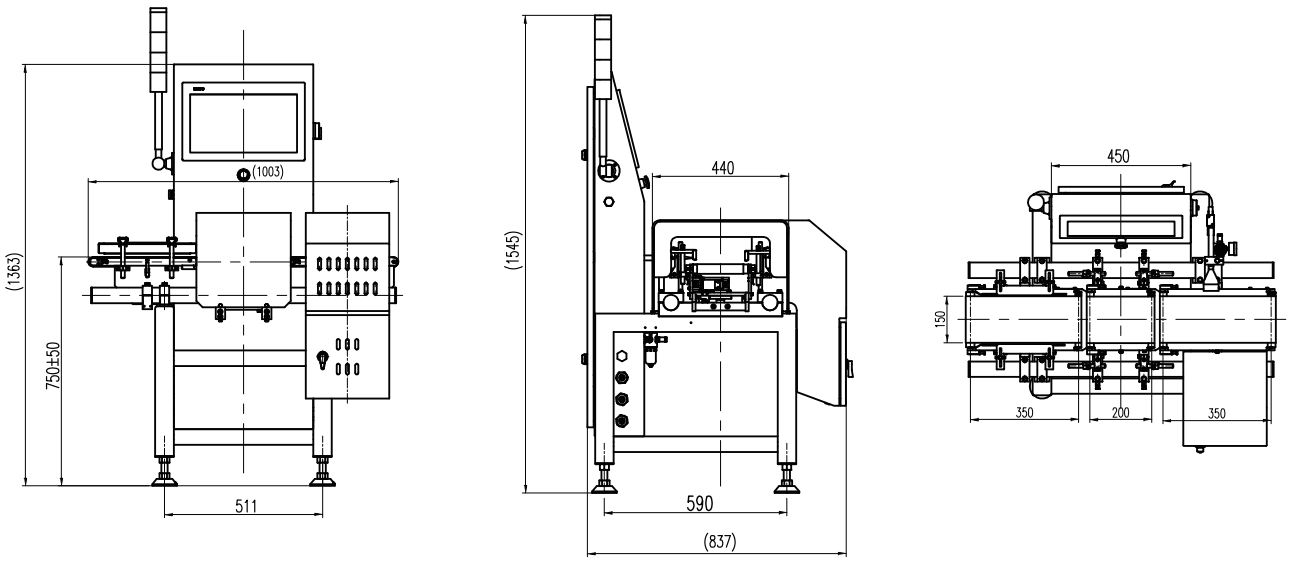

DYNAMIC CHECKWEIGHER

CW-600G

- This checkweigher is suitable for standard applications in food and other industries;
- System can store 100 product options for a wide variety of open or closed products in food and industrial production environments;
- System can be intergrated with metal detector.

Multiple industrial application



Food



Chemical



Accessaries



600g
Maximum capacity



±0.5g
Best accuracy

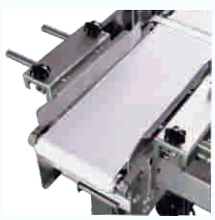

200 Pcs/min
Highest speed



Standard specification

Model	CW-600G
Maximum capacity	600g
Scale division	0.1g
Best accuracy*	±0.5g
Highest weighing speed*	200 pcs/min
Belt speed	5~60 m/min
Belt size	300×250mm
Weighing platform height*	750±50mm
Belt material	PU (white)
Structure of the material	Carbon steel, SS304 stainless steel (weighing platform)
Alarm light	3-color signal light (Red, yellow, green), Optional buzzer
Display size	10-inch color touch screen
Rejector lineup	Options: swing type, push type or lift up type rejector
Power	Single Phase AC-220V ±10%, 50/60HZ ,300W
Operating temperature	0~40℃
IP grade	IP54 ,IP65 Optional

* Depend on the weight, size, and material of test object. Test accuracy: 0.5g at 200pcs/min

Dimensions

Unit:mm

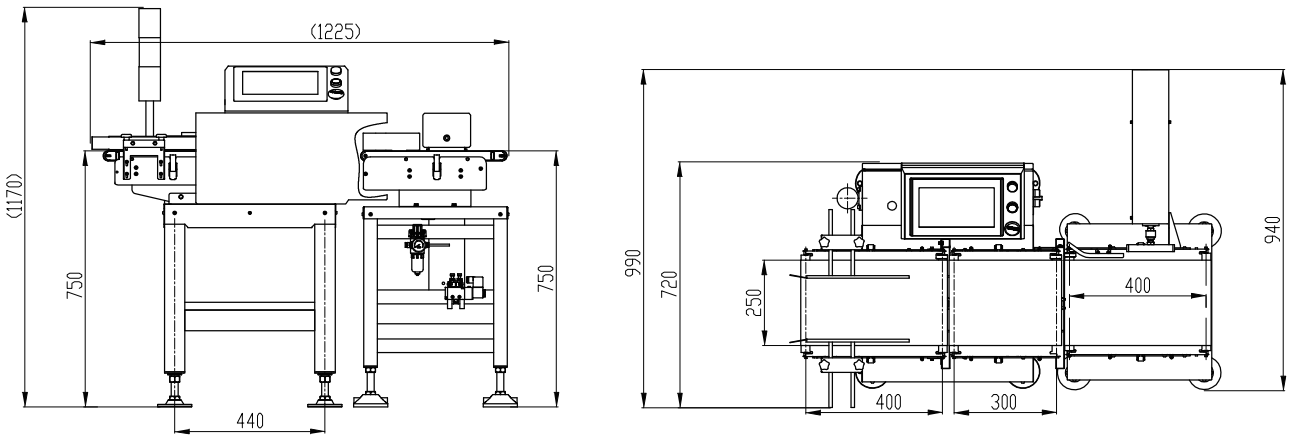

DYNAMIC CHECKWEIGHER

CW-1.2K

- For pouches, bags, and soft-sided containers, bottles;
- S304 stainless steel frame is standard;
- 10-inch touch screen, can store over 1 million transaction, data export through USB;

Multiple industrial application



Food



Grain



Chemical



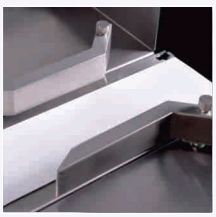

1200g
Maximum capacity



±0.5g
Best accuracy

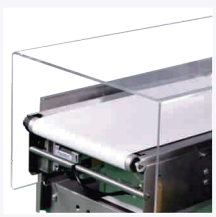

200 Pcs/min
Highest speed

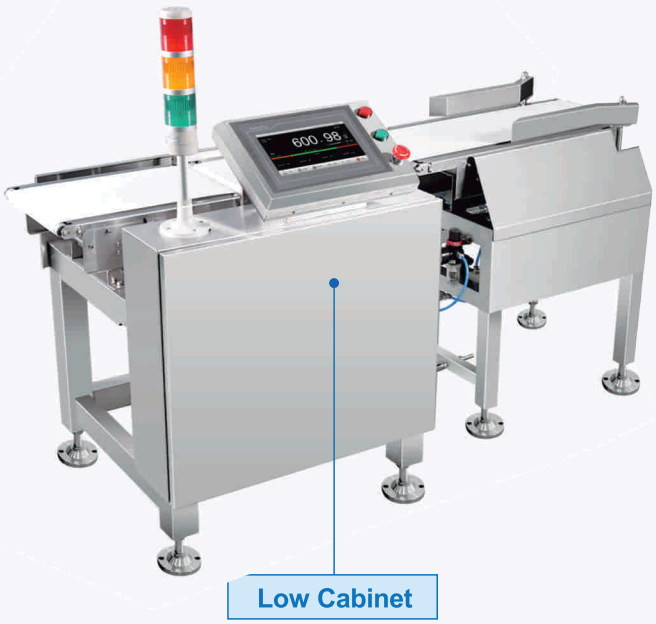

Standard specification

Model	CW-1.2K
Maximum capacity	1200g
Scale division	0.1g
Best accuracy*	± 0.5g
Highest weighing speed*	200 pcs/min
Belt speed	5~50 m/min
Belt size	400×250mm
Weighing platform height*	750±50mm
Belt material	PU（white）
Structure of the material	SS304 stainless steel
Alarm light	3-color signal light（Red, yellow, green）， Optional buzzer
Display size	10-inch color touch screen
Rejector lineup	Options: swing type， push type , flipped type rejector
Power	Single Phase AC-220V ±10%, 50/60HZ ,300W
Operating temperature	0~40℃
IP grade	IP54,IP65 Optional

* Depend on the weight, size, and material of test object. Test accuracy: 1g at 120pcs/min

Dimensions

Unit:mm

Low Cabinet

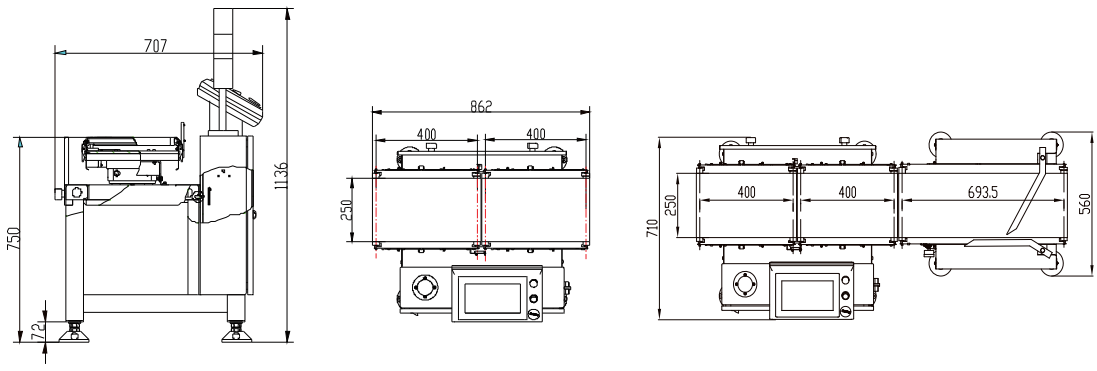

High Cabinet

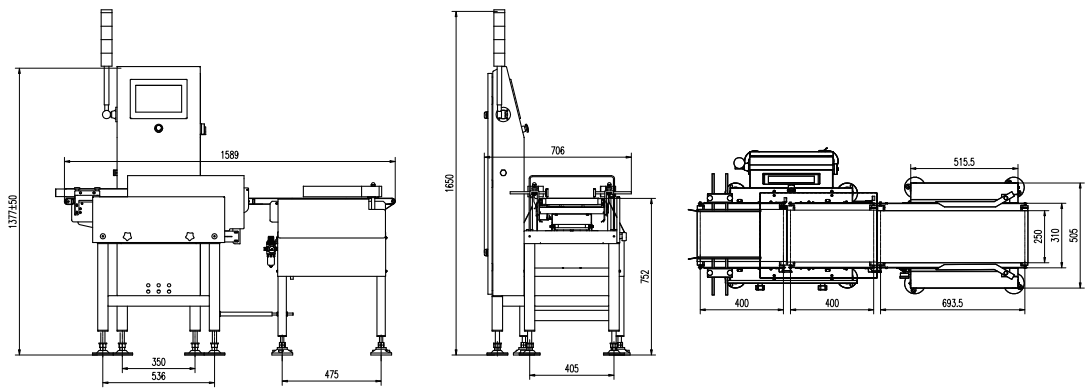

WEIGHT CHECK & SORTING MACHINE

CW-1.2K

- Can be used for sorting 5 to 7 grades of weight;
- For raw food, bags, bottles, containers and so on;
- SS304 stainless steel;
- 10-inch touch screen;
- Can store over 1 million entries, data export by USB.

Multiple applications







1200g
Maximum capacity

±0.5g
Best accuracy

120 Pcs/min
Highest speed

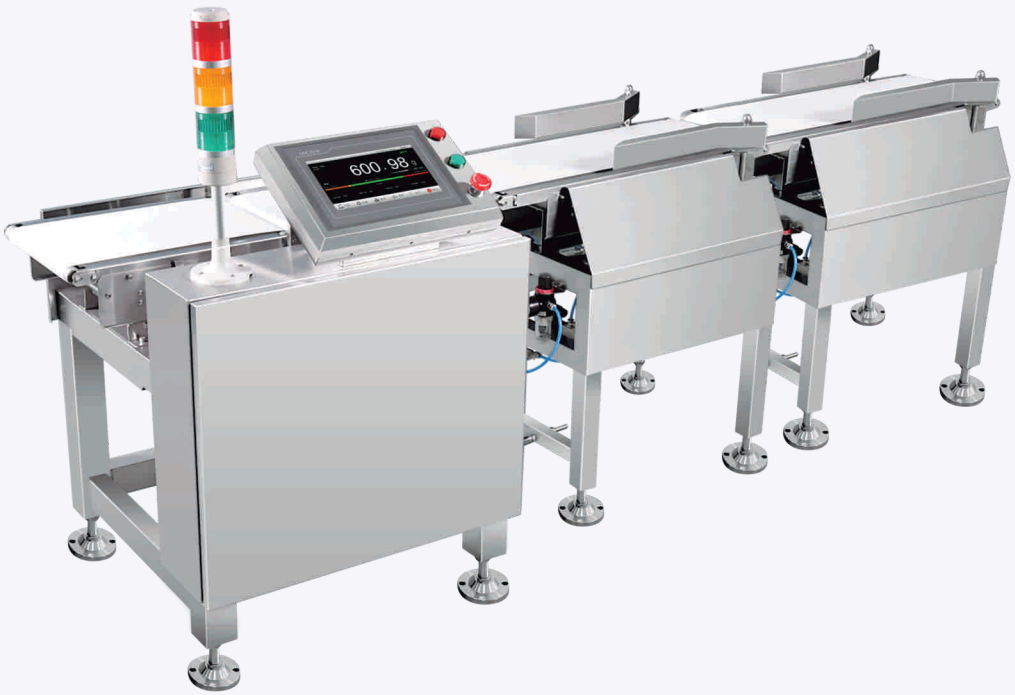

Specification

Model	CW-1.2K
Maximum capacity	1200g
Scale division	0.1g
Best accuracy*	±0.5g
Highest weighing speed*	120 pcs/min
Belt speed	5~50 m/min
Belt size	400×250mm
Weighing platform height*	750±50mm
Belt material	PU（white）
Structure of the material	SS304 stainless steel
Alarm light	3-color signal light（Red, yellow, green）， Optional buzzer
Display size	10-inch color touch screen
Rejector lineup	Options: swing type， push type rejector
Power	Single Phase AC-220V ±10%, 50/60HZ
Operating temperature	0~40℃
IP grade	IP54,IP65 Optional

* Depend on the weight, size, and material of test object. Test accuracy: 1g at 120pcs/min

Dimensions

Unit:mm

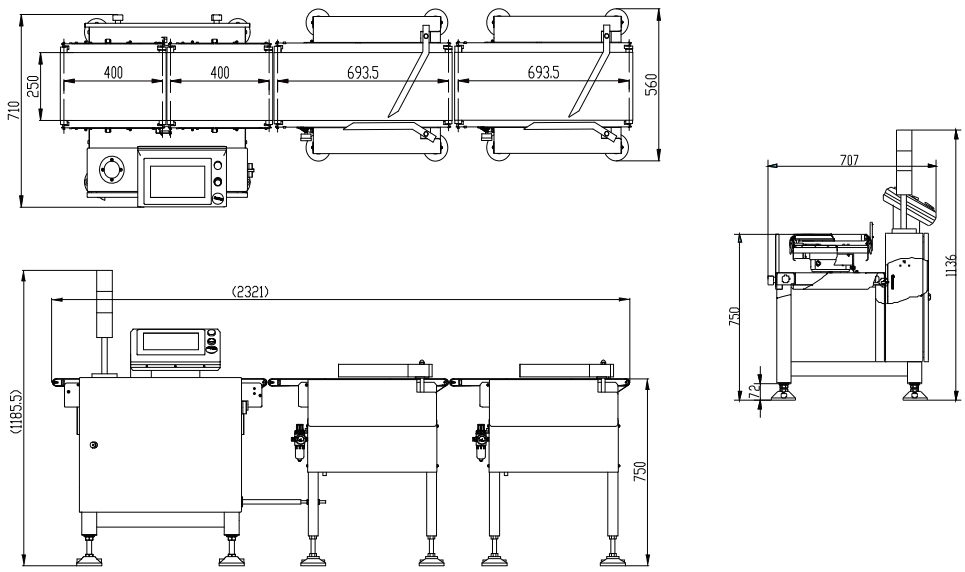

GENERAL MEASURE

Weighing automation technology revolutionaries

CHECKWEIGHER WITH METAL DETECTOR

CW-1.2K

CW-1.2K is a high speed and accuracy checkweigher with weight check and metal detection function.

Feature Highlight:

- 10-inch touch screen, easy operation;
- External expansion of IO port, serial port and network communication to achieve product management, monitoring and remote control;
- Widely used in food, pharmaceutical, daily use chemical, textile and other industries.







1200g
Maximum capacity

±0.5g
Best accuracy



100 Pcs/min
Highest speed

Best Metal Detection Sensitivity

Fe ≥ φ 0.8mm

Sus304 ≥ φ2.0mm

Non-Fe ≥ φ1.5mm

Standard Specification

Model	CW-1.2K
Maximum capacity	1200g
Best Accuracy*	±0.5g
Weighing Speed	≤100 pcs/min
Belt Speed	5~40 m/min
Belt Size	400mm*250mm
Belt Materia	PU White
Structure Material	304 Stainless Steel
Rejector	Optional: swing arm, push type, air blow
Best Metal Detection Sensitivity*	Fe ≥ φ0.8mm Sus304 ≥ φ2.0mm Non-Fe ≥ φ1.5mm
Metal Detector Wide	250mm
Metal Detector Height	Optional: 80mm/100mm/120mm/150mm/200mm
Platform Height	750±50mm
Power	AC 220V±10% , 50/60Hz , 400W,355W
Working Temperature	0~40°C
Maximum Humidity	90% R.H No Condensation
Limit Load	The instantaneous load shall not exceed 2.4kg

*Metal detection sensitivity depends on product dimension, product materials, and is affected by test object features (humidity, temperature, salinity, mineral content, etc.), as well as some environmental effects, such as vibration, electromaanetic field interference, et.,

Structure & Dimension

Unit: mm

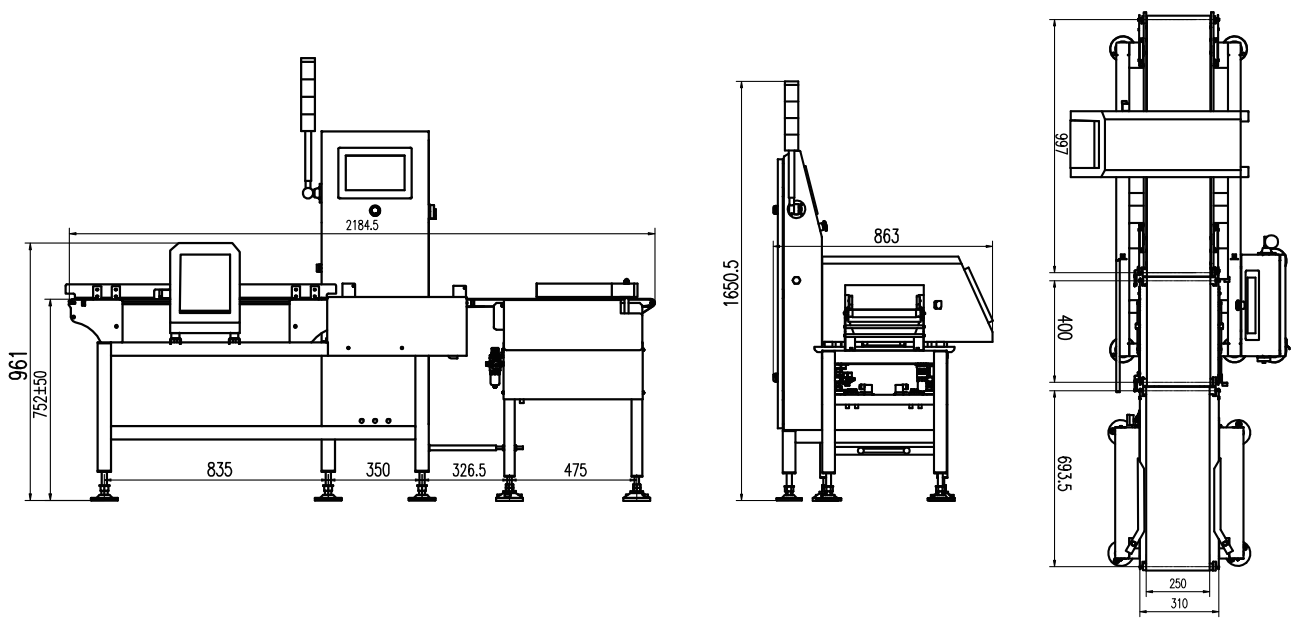

DYNAMIC CHECKWEIGHER

CW-3K

- CW-3K check weigher is suitable for product weight range from 0.3~3kg;
- Best weighing accuracy ±0.5;
- 10-inch touch screen, can store over 1 million transaction, data export through USB;
- It is widely used for food and beverage, pet food, daily use chemical industry, and so on.

Multiple applications









3 kg
Maximum capacity



±0.5g
Best accuracy



150 Pcs/min
Highest speed



Specification

Model	CW-3K
Maximum capacity	3kg
Best accuracy*	±0.5g
Highest weighing speed*	150pcs/min
Belt speed	10~90m/min
Belt size	400mm*300mm
Roller distance(center)	400mm
Weighing platform height*	750 (±50mm) (customizable)
Power	AC220V±10%, 50/60Hz, 675W
Temperature	0~40℃
Humidity	90% R.H No Condensation
Limit load	The instantaneous limit load shall not exceed 5 kg

Dimensions

Unit:mm

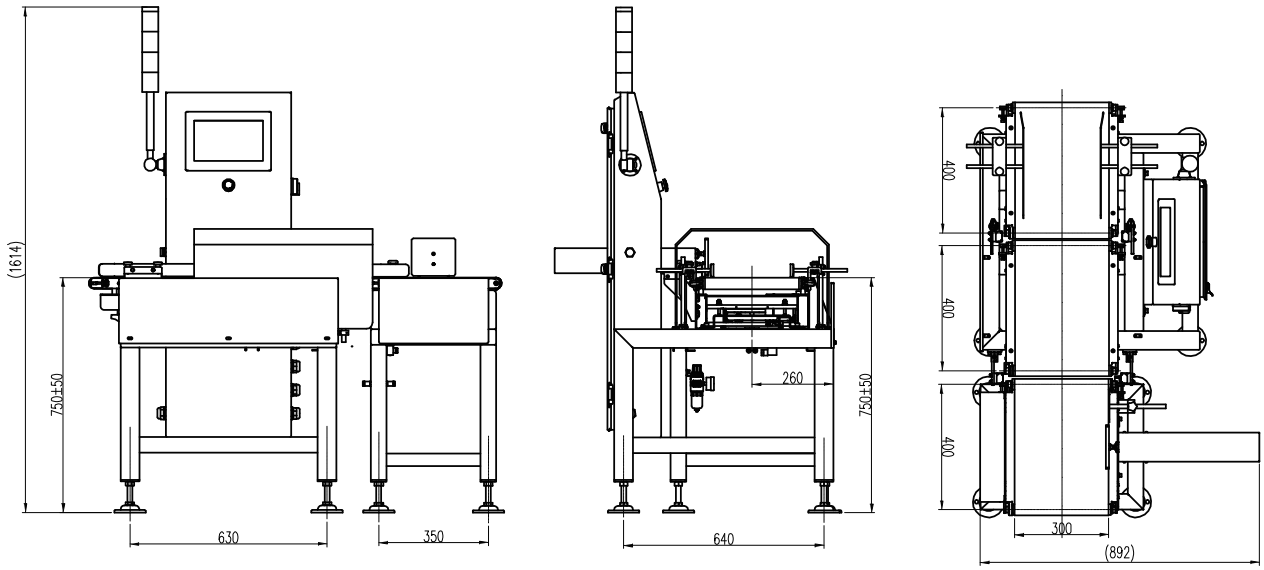

GENERAL MEASURE
杰 · 曼 · 科 · 技

Weighing automation technology revolutionaries

CHECKWEIGHER WITH METAL DETECTOR

CW-3K

CW-3K is a high speed and accuracy checkweigher with weight check and metal detection function.

Feature Highlight:

- 10-inch touch screen, easy operation;
- External expansion of IO port, serial port and network communication to achieve product management, monitoring and remote control;
- Widely used in food, pharmaceutical, daily use chemical, textile and other industries;







3kg
Maximum capacity

±1g
Best accuracy

100 Pcs/min
Highest speed



Best Metal Detection Sensitivity

Fe ≥ Φ 0.8mm
Sus304 ≥ Φ 2.0mm
Non-Fe ≥ Φ 1.5mm

Standard Specification

Model	CW-3K
Power	AC220V±10%，50/60Hz，730W
Maximum capacity	3kg
Best accuracy	±1g
Highest speed	≤100 pcs/min
Belt speed	5~40m/min
Belt size	400mm*300mm
Best metal detection sensitivity*	Fe ≥ Φ0.8mm Sus304 ≥ Φ2.0mm Non-Fe ≥ Φ1.5mm
Metal detector wide	300mm
Metal detector height	100mm（customization available）
Platform height	750±50mm（customization available）
Working temperature	0~40°C
Maximum humidity	90%R.H no condensation
Limit load	The instantaneous load shall not exceed 6kg

*Metal detection sensitivity depends on product dimension, product materials, and is affected by test object features (humidity, temperature, salinity, mineral content, etc.), as well as some environmental effects, such as vibration, electromaanetic field interference, et.,

Structure & Dimension

Unit: mm

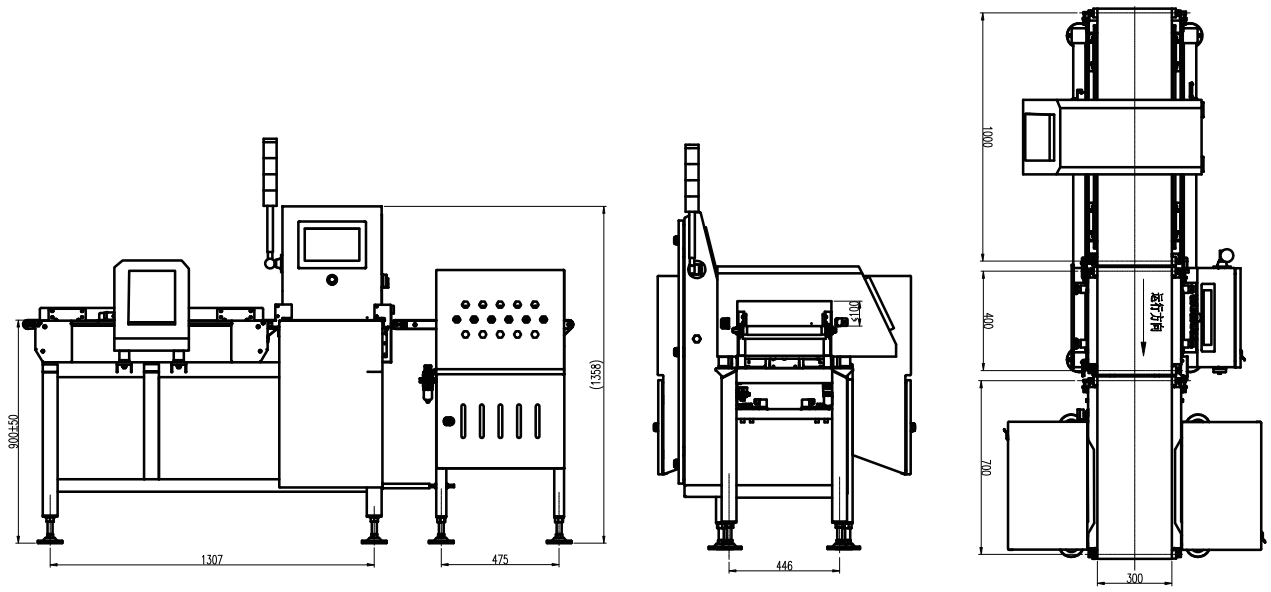

DYNAMIC CHECKWEIGHER

CW-6K

- CW-6K check weigher is suitable for product weight range from 0.5-6kg.
- Weighing accuracy is within ±2g;
- 10-inch touch screen, can store over 1 million transaction, data export through USB;
- It is widely used for food, feeds, logistic industries, automation production line, and so on.

Multiple industrial application



Feeds



Logistic



Automation production line



6kg
Maximum capacity



±2g
Best accuracy

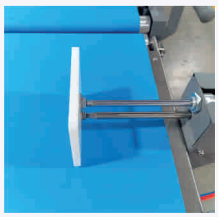

100 Pcs/min
Highest speed



Standard specification

Model	CW-6K
Maximum capacity	6kg
Scale division	0.5g
Best accuracy(3σ)*	±2g
Highest weighing speed*	100pcs/min
Belt speed	10~50m/min
Belt size	500*400mm
Weighing platform height*	750±50mm
Belt material	PU (white)
Structure of the material	Carbon steel, SS304 for weighing platform
Alarm light	3-color signal light (Red, yellow, green)
Display size	10-inch color touch screen
Rejector lineup	Options: swing type, push type
Power	AC220V single phase, 50/60Hz, 1275W
Operating temperature	0~40℃
IP grade	IP54,IP65 Optional

*Depend on the weight, size and material of test object.

Dimensions

Unit:mm

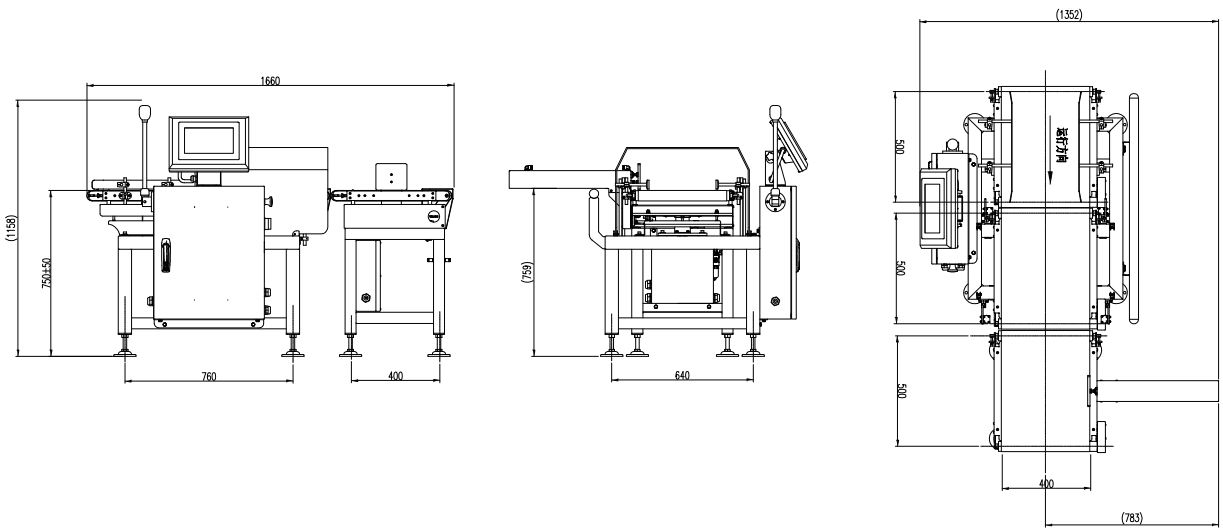

GENERAL MEASURE
杰 · 曼 · 科 · 技

Weighing automation technology revolutionaries

CHECKWEIGHER WITH METAL DETECTOR

CW-6K

CW-6K checkweigher with metal detector is a combo machine with dynamic weight checking and metal detecting function.

Feature Highlight:

- 10-inch touch screen, easy operation;
- External expansion of IP port, serial port and network communication to achieve product management, monitoring and remote control;
- Widely used in food, daily use chemical, textile and packaging industries and so on







6kg
Maximum capacity

±1g
Best accuracy

80 Pcs/min
Highest speed



Best Metal Detection Sensitivity

Fe ≥ Φ1.2mm
Sus304 ≥ Φ2.2mm
Non-Fe ≥ Φ2.0mm

Standard Specification

Model	CW-6K
Maximum capacity	6kg
Best accuracy	±1g
Highest speed	≤80 pcs/min
Belt speed	5~40m/min
Belt size	500mm*400mm
Belt material	PU White
Structure material	304
Rejector	Optional: swing arm, push type, drop-off
Best metal detection sensitivity*	Fe ≥ φ1.2mm Sus304 ≥ φ2.2mm Non-Fe ≥ φ2.0mm
Metal detector wide	400mm
Metal detector height	80mm/100mm/120mm/150mm/200mm
Platform height	750±50mm
Power	AC220V±10%，50/60Hz，1275W
Working temperature	0~40°C
Maximum humidity	90%
Limit load	12kg

*Metal detection sensitivity depends on product dimension, product materials, and is affected by test object features (humidity, temperature, salinity, mineral content, etc.), as well as some environmental effects, such as vibration, electromaanetic field interference, et.,

Structure & Dimension

Unit: mm

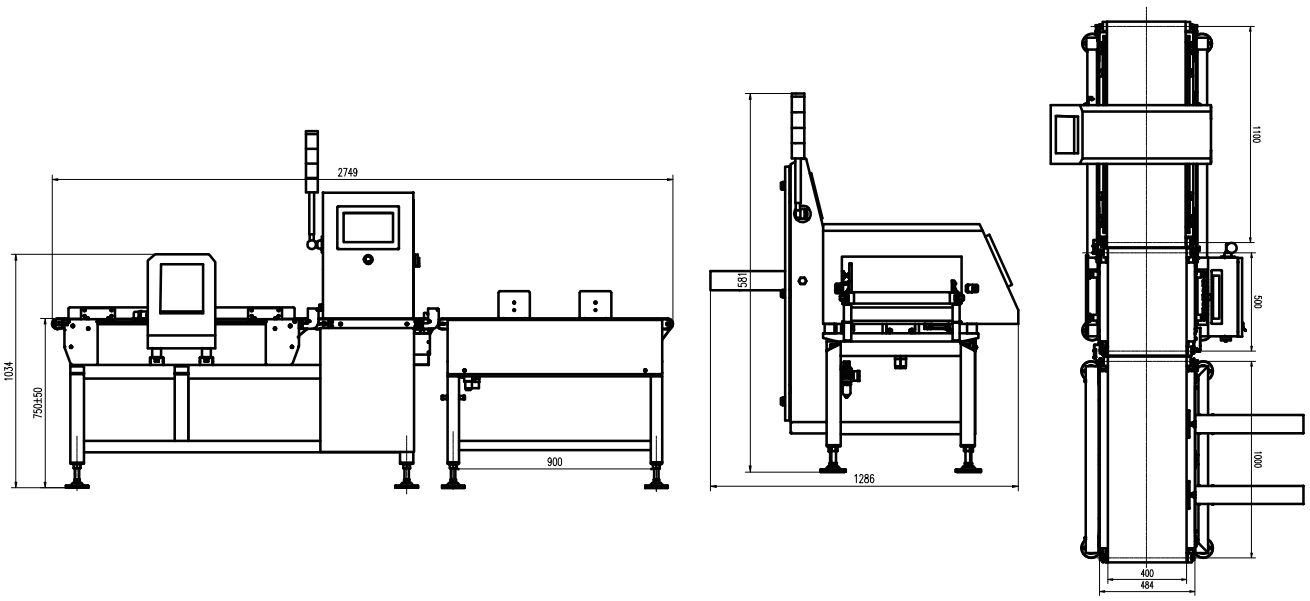

DYNAMIC CHECKWEIGHER

CW-15K

- Heavy load, for product weight up to 15kg, with accuracy ±5g;
- 10-inch screen, easy to operate;
- 100 different products storage;
- Widely used for checking weight of products in boxes, bags, barrel, etc.

Multiple industrial application



Feeds


Logistic


Automation



15 kg
Maximum capacity



±5g
Best accuracy



85 Pcs/min
Highest speed



Standard specification

Model	CW-15K
Maximum capacity	15kg
Scale division	1g
Best accuracy*	±5 g
Highest weighing speed*	85pcs/min
Belt speed	45~68m/min
Belt size	800×500mm
Weighing platform height*	750±50mm
Belt material	PVC（black）
Structure of the material	Carbon steel, SS304 stainless steel (weighing platform)
Alarm light	3-color signal light（Red, yellow, green）， Optional buzzer
Display size	10-inch color touch screen
Rejector lineup	Push type
Power	Single Phase AC-220V ±10%, 50/60HZ ,275W
Operating temperature	0~40℃
IP grade	IP54 ,IP65 Optional

*Depend on the weight, size and material of test object.

Dimensions

Unit:mm

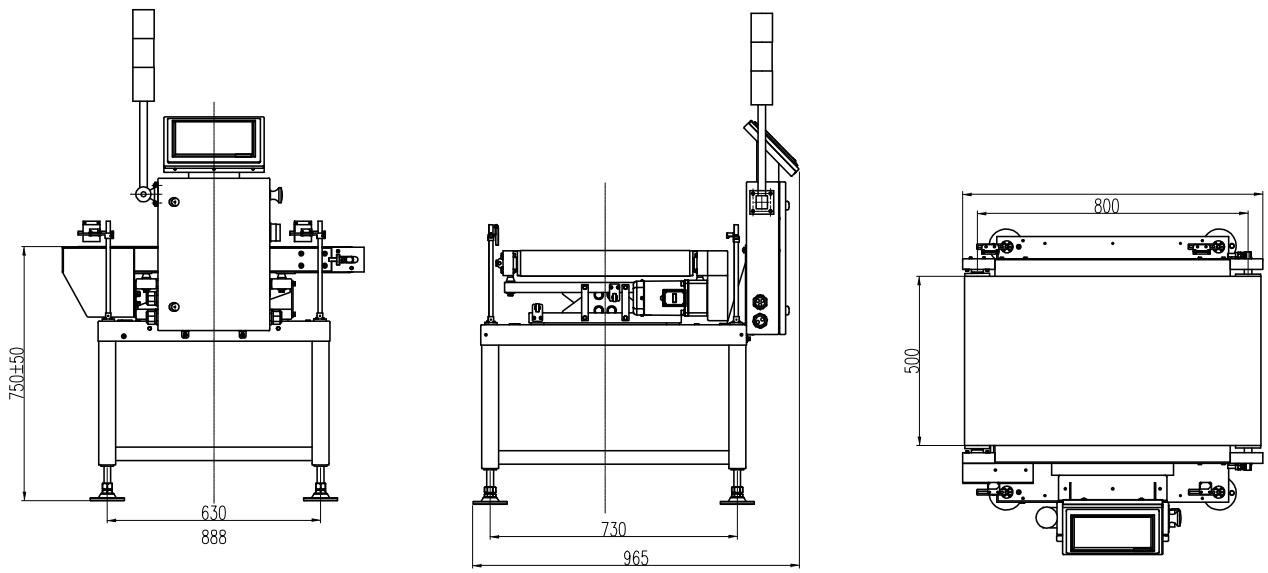

DYNAMIC CHECKWEIGHER

CW-30K

- Heavy load, for product weight up to 30kg, with accuracy ±5g;
- 10-inch screen, easy to operate;
- 100 different products storage;
- Widely used for checking weight of products in boxes, bags, barrel, etc.

Multiple industrial application



Feeds



Logistic



Automation production line



30kg
Maximum capacity



±5g
Best accuracy



40 Pcs/min
Highest speed



Standard specification

Model	CW-30K
Maximum capacity	30kg
Scale division	1g
Best accuracy*	±5 g
Highest weighing speed*	30~40pcs/min
Belt speed	22~34m/min
Belt size	800*500mm
Weighing platform height*	750±50mm
Belt material	PVC
Structure of the material	Carbon steel, SS304 for weighing platform
Alarm light	3-color signal light（Red, yellow, green）
Display size	10-inch color touch screen
Rejector lineup	Options: push type
Power	AC220V single phase, 50/60Hz ,275W
Operating temperature	0~40℃
IP grade	IP54,IP65 Optional

*Depend on the weight, size and material of test object.

Dimensions

Unit:mm

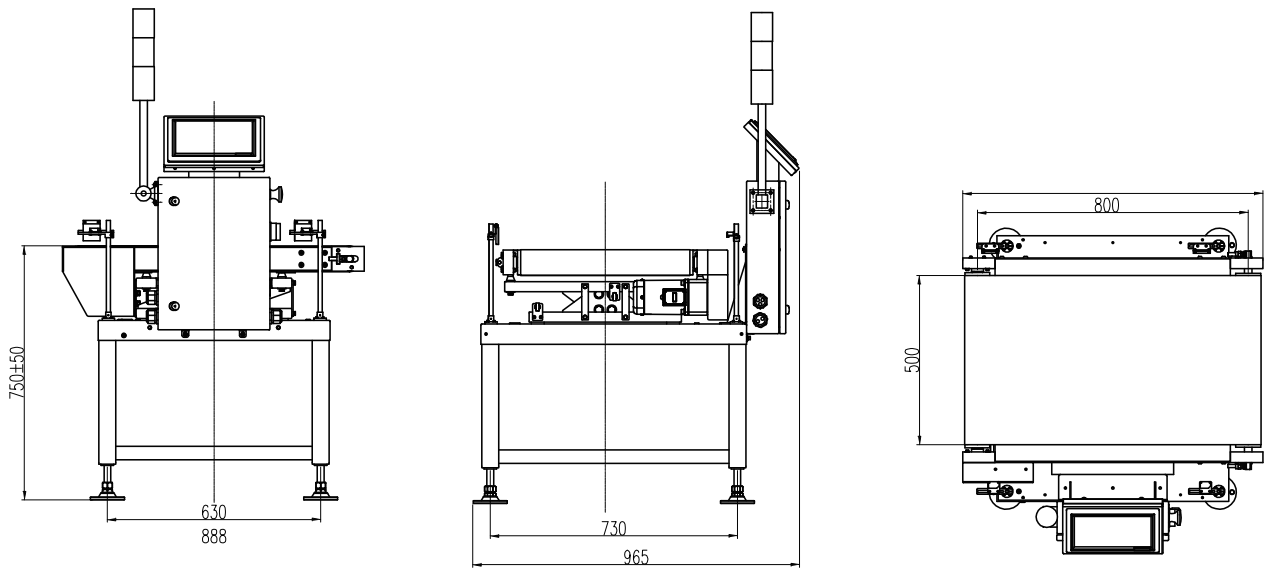

DYNAMIC CHECKWEIGHER

CW-60K

- Heavy load heavy duty, for bags ,boxes weight up to 60kg with accuracy within 10 grams;
- Strong structure for hash environment, option S304 S316 structure, option stainless loadcell;
- Using 4 loadcells for plat form, with variable mounting position for high accuracy under ruff environment;
- Flexible Modbus communication to integrate with computer, scanner, dimension measure device and soon.

Multiple industrial application



Logistic



Automation



Grain and feeds



60kg
Maximum capacity



±10g
Best accuracy



60 Pcs/min
Highest speed



Standard specification

Model	CW-60K
Maximum capacity	60Kg
Scale division	5g
Best accuracy*	±10g
Highest weighing speed*	60pcs/min
Belt speed	10~60m/min
Belt size	1000/1200×600mm
Weighing platform height*	400~750mm（±50mm）
Structure of the material	Carbon steel, SS304 stainless steel (weighing platform)
Alarm light	3-color signal light（Red, yellow, green）， Optional buzzer
Display size	10-inch color touch screen
Rejector lineup	Push type
Belt material	PVC（black）
Power	Single Phase AC-220V ±10%, 50/60HZ ,825W
Operating temperature	0~40℃
IP grade	IP54 ,IP65 Optional

*Depend on the weight, size and material of test object.

Dimensions

Unit:mm

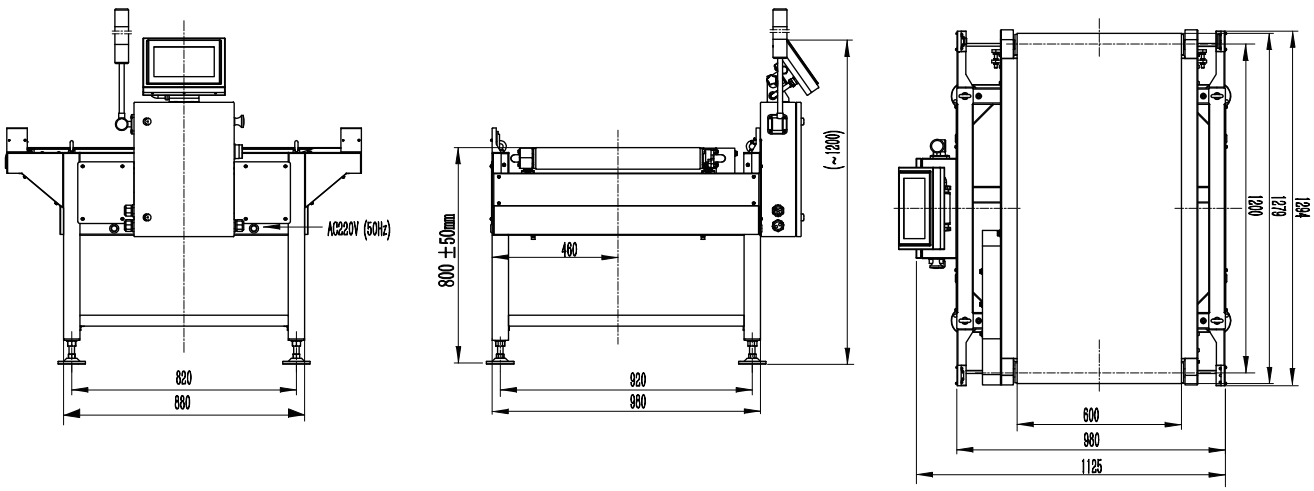

GENERAL MEASURE

Weighing automation technology revolutionaries

VERTICAL CHECKWEIGHER

CW-60K-V

CW-60K-V checkweigher has wide weighing range but high accuracy guarantee. It is perfect for weighing the various bags and boxes running in vertical way in the production line.

- Standard module design for easy installation and maintenance;
- Easy integrating in the production line;
- Maximum capacity: 60kg, weighing accuracy is within ±20g;

Multiple applications









60kg
Maximum capacity



±10g
Best accuracy



50 Pcs/min
Highest speed



Specification

Model	CW-60K-V
Maximum capacity	60kg
Best accuracy*	±10g
Highest speed*	≤50pcs/min
Belt speed	40m/min
Conveyor size	800mm*400mm
Distance between rollers	800mm
Weighing platform height	400 (±50mm)
Structure material	Carbon Steel, SS304 (weighingPlatform)
Belt material	PVC (black)
Display	10-inch touch screen
Power	AC220V±10%, 50/60Hz, 825W
Working temperature	0~40℃
Max. humidity	90% R.H, non-condensation
Load limit	The instantaneous load limit is 100kg

*It depends on the features of tested object, such as size and weight.

Dimensions

Unit:mm

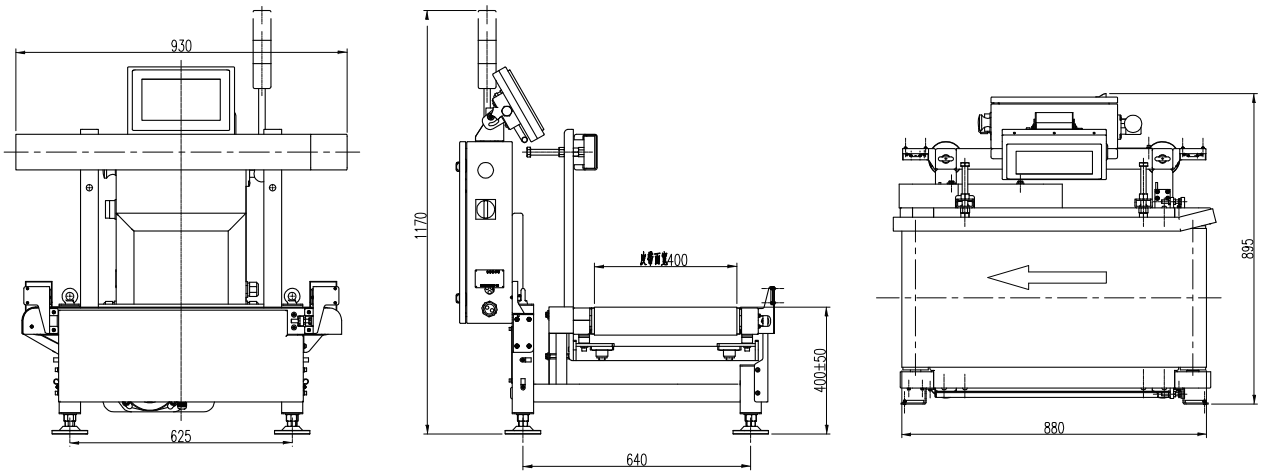

Linkedin Facebook Wechat

General Measure Technology Co.,Ltd.

Address：Room2208, Block A, Building 6, Shenzhen International Innovation Valley,
Nanshan District, Shenzhen, Guangdong Province, P.R.China.
Tel/Wechat：+86 185 6585 5789
E-mail: xjlv@szgmt.com
Website: www.gmweighing.com