GENERAL MEASURE

Weighing automation technology

GM9907-L2/LD

Packing Controller

(L2:Simplex Packing LD:Duplex Packing)

GM9907-L2/LD is the simplex/duplex packing controller , widely used for, granule packing scale, powder packing scale,big bag,valve type scale-cement, etc.

Version Features

User-Friendly · Better Experience

- Memory card build in, 7-inch touch screen for displaying clearly and operating easily, Single/double scale interface mode switching;

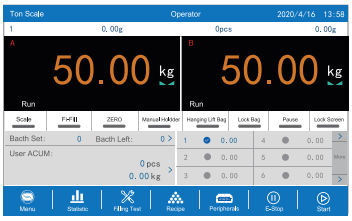

- **L2:** Simplex packing; **LD:** Duplex packing; can be choosed, interface displayed accordingly;

- Multi-Mode: With Hopper, No Hopper, Big Bag Scale,Valve Scale,PLC;

- Self-Adaptive: I/O Programmable;

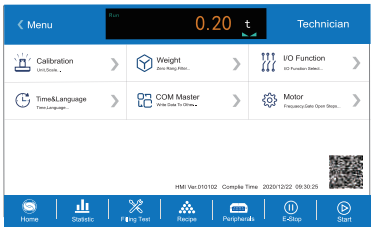

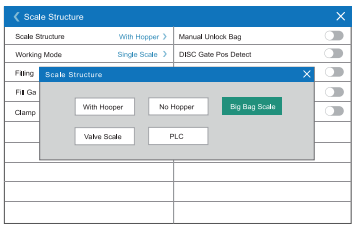

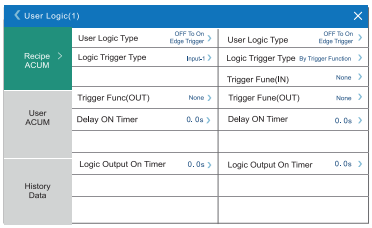

Communication

RS485+RS232

- For connecting PC,PLC,Printer,Label Printer, Remote Display,Code Printer,or other external devices,for reading and setup remotely;

USB

- For importing and exporting recipes,works,I/O function communication and other parameters, upgrading system software,customizing boot screen,etc;

12 Input/16 Output

- For staring, stopping, feeding, unloading, clamping/loosening bags,etc;

Modbus TCP

- For connecting PC, PLC, Printers,etc., for reading remotely.

Specification

Model		GM9907-L2/LD
General Specifications	Power Supply	DC24V
	Operating Temperature	-10~40℃
	Maximum Humidity	90%R.H without dew
	Test Standard	Class III 6000e,1μV/d
	Power Consume	About 15W
Measurement parameters	A/D converter type	24 bit Sigma-Delta
	A/D Conversion Rate	120/240/480/960 times /per second
	Non-Linear	0.01%F.S
	Gain Drifting	10PPM/℃
	Minimum Sensitivity	0.02μV/d
	Analog Input Range	0.02~15mV
	Display Accuracy	1/100,000
	Power Source for Load Cell	DC5V 125mA(MAX)
	Input Resistance	10MΩ
	Zero Point Adjustment Range	0.002~15mV（load cell 3mV/V）
I/O Interfaces and Communications	12 Input 16 Output, I/O Selectable	
	12 Input, Active-low Start, Emergency stop, Stop, Zeroing, Clear alarm, Clear total ACUM, Bag Lock/Unlock, Manual discharge, Manual fine flow, Manual coarse flow, Change recipe, Empty material	
	16 Output, Single drive current 500mA Run, Stopped, Coarse flow, Medium flow, Fine flow, Bag lock, Result waiting, Ready, Discharge, -NZ-, Pat bag, FILL, EMPT, Alarm, Batch complete, Over/Under	

unit:mm

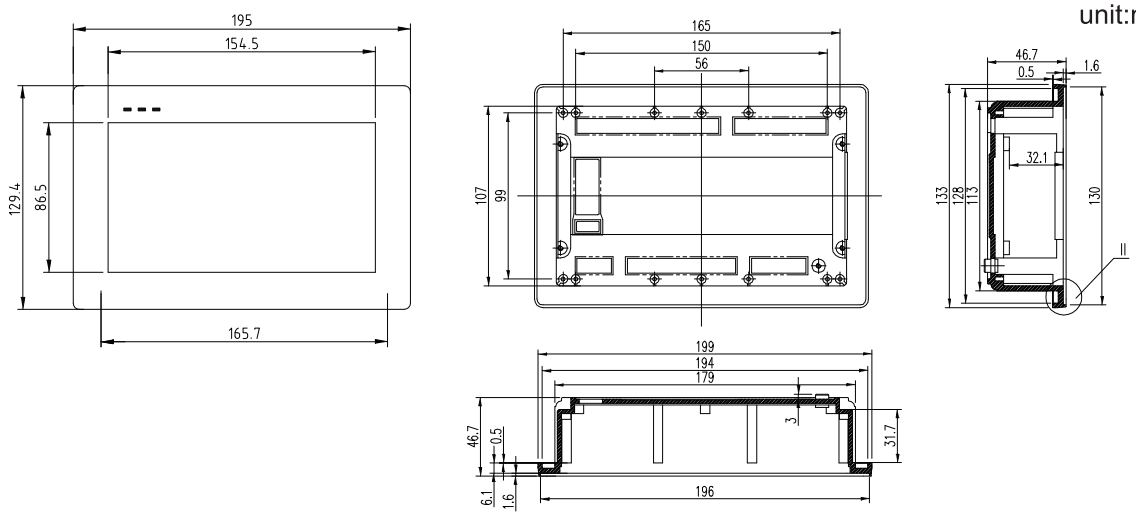

Application Diagram

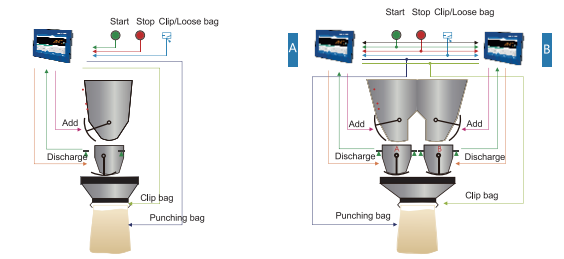

Simplex Packing Controller with Hopper

Duplex Packing Controller without Hopper

GM9907-L2

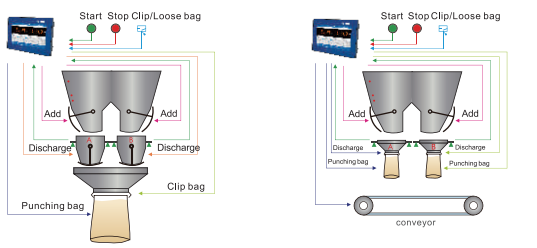

Duplex Packing Controller with Hopper

Duplex Packing Controller without Hopper

GM9907-LD

GENERAL MEASURE

Weighing automation technology

GM9907-L4

Reduce weight method packing controller

GM9907-L4 is designed for Loss-in-weight bagging machine.

It can be widely used in rice, grains, feeds, chemical industries etc.

Version Features

User-Friendly · Better Experience

- Memory card build in, 7-inch touch screen for displaying clearly and operating easily;

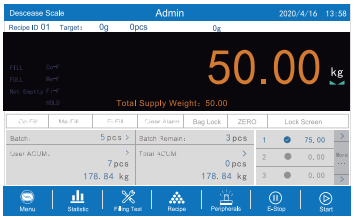

- It can store 20 groups of recipes, 9 groups of users accumulation data;

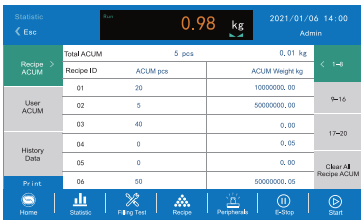

- Data backup and recovery function can save the optimal parameters and improve the working efficiency;

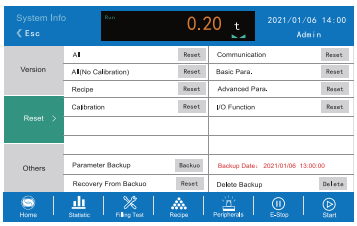

- Starting patting mode when filling material to shape bags by setting relevant parameter;

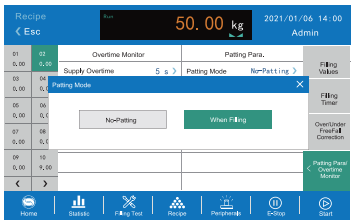

Communication

RS485+RS232

- For connecting PC,PLC,Printer,Label Printer, Remote Display,Code Printer,or other external devices,for reading and setup remotely;

USB

- For importing and exporting recipes,works,I/O function communication and other parameters, upgrading system software,customizing boot screen,etc;

12 Input / 16 Output

- For staring, stopping, feeding, unloading, clamping/loosening bags,etc;

Modbus TCP

- For connecting PC, PLC, Printers,etc., for reading remotely.

Specification

Model		GM9907-L4
General Specifications	Power Supply	DC24V
	Operating Temperature	-10~40℃
	Maximum Humidity	90%R.H without dew
	Test Standard	Class III 6000e,1μV/d
	Power Consume	About 15W
Measurement parameters	A/D converter type	24 bit Sigma-Delta
	A/D Conversion Rate	120/240/480/960 times /per second
	Non-Linear	0.01%F.S
	Gain Drifting	10PPM/℃
	Minimum Sensitivity	0.02μV/d
	Analog Input Range	0.02~15mV
	Display Accuracy	1/100,000
	Power Source for Load Cell	DC5V 125mA(MAX)
	Input Resistance	10MΩ
	Zero Point Adjustment Range	0.002~15mV（load cell 3mV/V）
I/O Interfaces and Communications	2 Input 16 Output, I/O Selectable	
	12 Input, Active-low Start, Emergency stop, Stop, Zeroing, Clear alarm, Change recipe, Bag Lock/Unlock, Manual discharge, Manual fine flow, Manual coarse flow, Clear total ACUM, etc.	
	16 Output, Single drive current 500mA Run, Stopped, Coarse flow, Medium flow, Fine flow, Bag lock, Result waiting, Pat bag, FILL, Batch complete, Supply full, Pause, etc.	

unit:mm

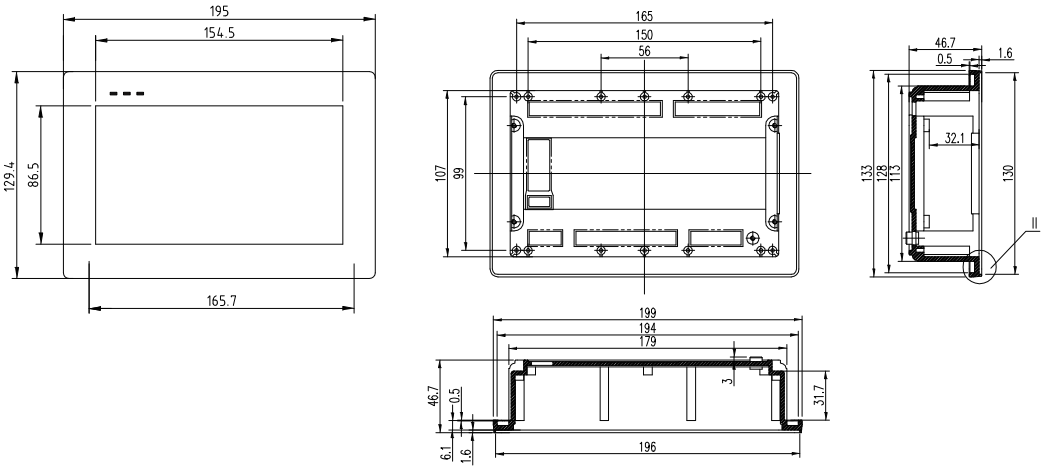

Application Diagram

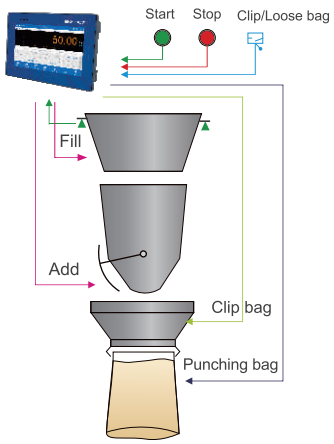

Reduce weight method packing

GENERAL MEASURE

Weighing automation technology

GM9907-L5

Bulk Scale Controller
(Continuous Weighing)

GM9907-L5 is designed for bulk scale to solve the problem of batch weight and automatic totalizing of incoming and outgoing material. It can be used widely used in chemical, grain, feeds, construction and harbor logistics industies etc.

Version Features

User-Friendly · Better Experience

- Memory card build in, 7-inch touch screen for displaying clearly and operating easily;

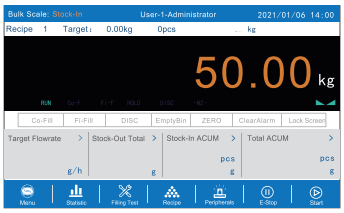

- Flow rate function can discharge material automatically and alarm when flow rate is low,which is more intelligent;

- Two scale mode: Stock-In or Stock-Out; Data information is more convenient to operate;

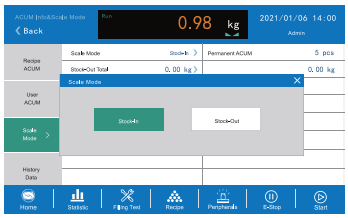

- Two packing mode: Motor or Pneumatic; Add/Discharge feed is more convenient;

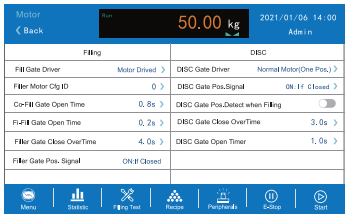

Communication

RS485+RS232

- For connecting PC,PLC,Printer,Label Printer, Remote Display,Code Printer,or other external devices,for reading and setup remotely;

USB

- For importing and exporting recipes,works,I/O function communication and other parameters, upgrading system software,customizing boot screen,etc;

12 Input / 16 Output

- For staring, stopping, feeding, unloading, clamping/loosening bags,etc;

Modbus TCP

- For connecting PC, PLC, Printers, etc., for reading remotely.

Specification

Model		GM9907-L5
General Specifications	Power Supply	DC24V
	Operating Temperature	-10~40℃
	Maximum Humidity	90%R.H without dew
	Test Standard	Class III 6000e,1μV/d
	Power Consume	About 15W
Measurement parameters	A/D converter type	24 bit Sigma-Delta
	A/D Conversion Rate	120/240/480/960 times /per second
	Non-Linear	0.01%F.S
	Gain Drifting	10PPM/℃
	Minimum Sensitivity	0.02μV/d
	Analog Input Range	0.02~15mV
	Display Accuracy	1/100,000
	Power Source for Load Cell	DC5V 125mA(MAX)
	Input Resistance	10MΩ
	Zero Point Adjustment Range	0.002~15mV（load cell 3mV/V）
I/O Interfaces and Communications	12 Input 16 Output, I/O Selectable	
	12 Input, Active-low Start, Emergency stop, Stop, Zeroing, Clear alarm, Fill permission, Clogged, Manual fine flow, etc.	
	16 Output, Single drive current 500mA Run, Stopped, Clogged, Coarse flow, Fine flow, Result waiting, Over/under, Alarm, Stock-out Done, Last feed, DISC, -NZ-, etc.	

unit:mm

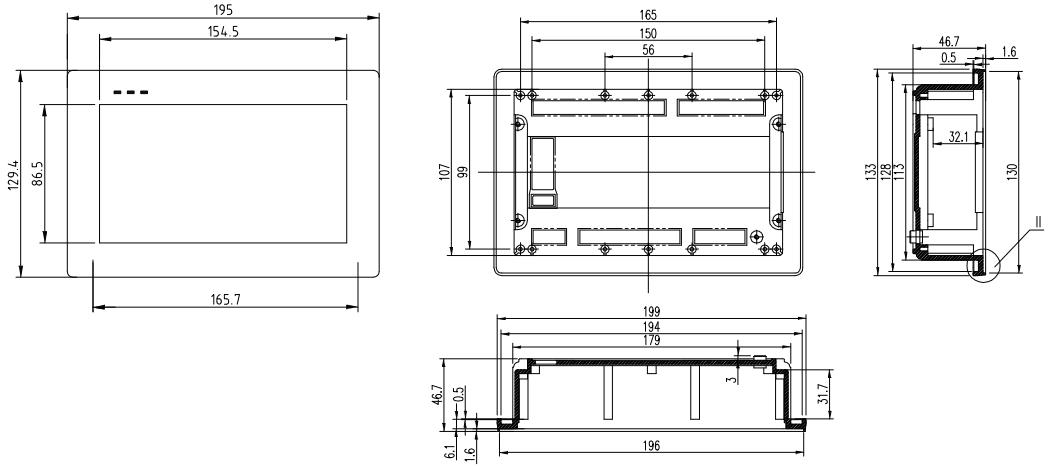

Application Diagram

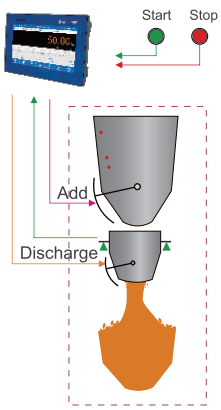

Continuous Weighing

GENERAL MEASURE

Weighing automation technology

GM9907-L6/L6D

Liquid Filling Controller

GM9907-L6/L6D is designed for single/double nozzle liquid filling applications. It can widely used in food&beverage, chemical, coating industries and so on.

Version Features

User-Friendly · Better Experience

- Memory card build in, 7-inch touch screen for displaying clearly and operating easily;

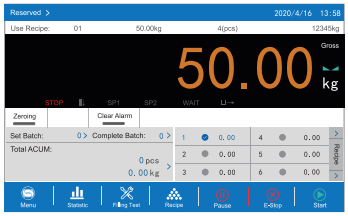

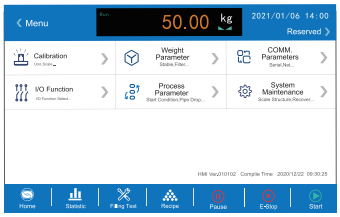

- L6/L6D single or double nozzle liquid filling applications can be chosen. UI changed accordingly.

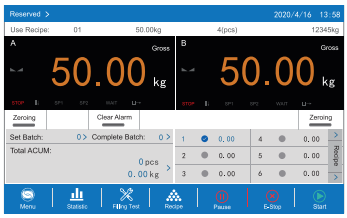

- It can store 20 pieces of formulation for different materials filling.

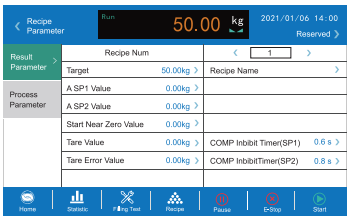

- Automatic 2-filling speed, feed control function, easy to connect with front-end equipment.

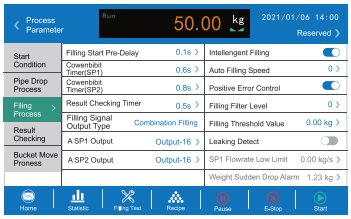

Communication

RS485+RS232

- For connecting PC,PLC,Printer,Label Printer, Remote Display,Code Printer,or other external devices,for reading and setup remotely;

USB

- For importing and exporting recipes,works,I/O function communication and other parameters, upgrading system software,customizing boot screen,etc;

12 Input / 16 Output

- I/O programmble.

Modbus TCP

- For connecting PC, PLC, Printers, etc., for reading remotely.

Specification

Model		GM9907-L6/L6D
General Specifications	Power Supply	DC24V
	Operating Temperature	-10~40℃
	Maximum Humidity	90%R.H without dew
	Test Standard	Class III 6000e,1μV/d
	Power Consume	About 15W
Measurement parameters	A/D converter type	24 bit Sigma-Delta
	A/D Conversion Rate	120/240/480/960 times /per second
	Non-Linear	0.01%F.S
	Gain Drifting	10PPM/℃
	Minimum Sensitivity	0.02μV/d
	Analog Input Range	0.02~15mV
	Display Accuracy	1/100,000
	Power Source for Load Cell	DC5V 125mA(MAX)
	Input Resistance	10MΩ
	Zero Point Adjustment Range	0.002~15mV（load cell 3mV/V）
I/O Interfaces and Communications	**12 Input, Active-low** Start, Emergency stop, Zeroing, Clear alarm, Switch formula, Dropping/lifting nozzle, feeding, etc	
	16 Output, single drive current 500mA Run, Stop, Fast feeding, Slow feeding, Constant value, Over/Under weight, Alarm, Move barrel, dropping nozzle, Batching finish, etc.	

unit:mm

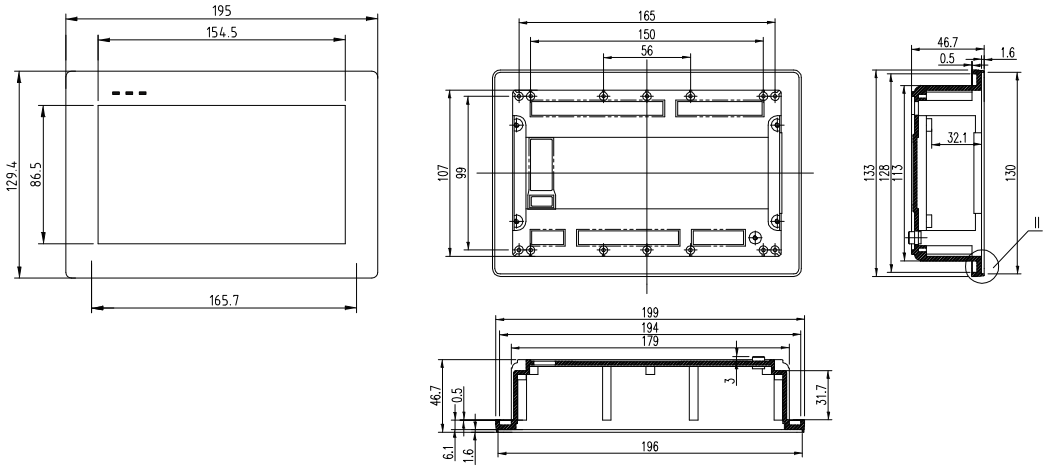

Application Diagram

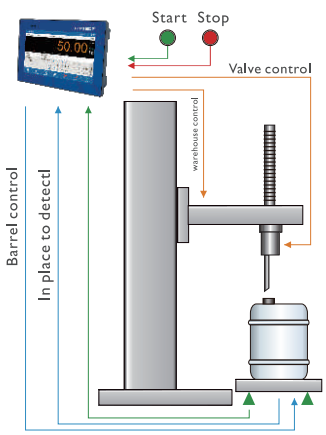

Single Nozzle for Liquid Filling Application

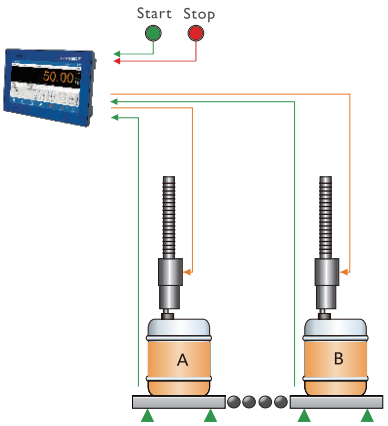

Double Nozzle for Liquid Filling Application

GENERAL MEASURE

Weighing automation technology

GM9907-LB

Batching Scale Controller

GM9907-LB is designed for batching scale that can sort feeding orders of a variety of materials. It can be widely used in concrete mixing, bituminous mixing, metallurgy, chemical, feeds industries etc.

Version Features

User-Friendly · Better Experience

- Memory card build in, Dynamic batching process can be graphically displayed for better understanding and monitoring;.

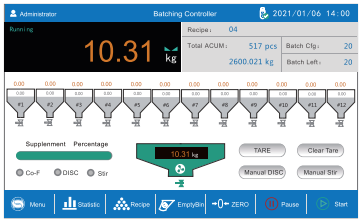

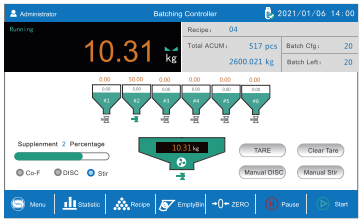

- Support the batching of 12 kinds of materials. It can be customized according to the batching process sequence, which is flexible to use;

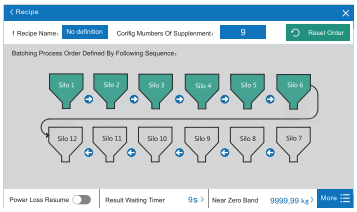

- The working process is clear. Feeding value and time of the material can be set, and real-time feeding dynamic can be displayed;

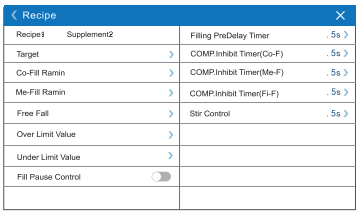

- User-friendly design: Save function when power down and monitoring alarm function;

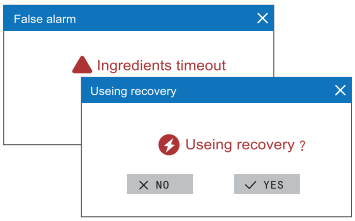

Communication

RS485+RS232

- For connecting PC,PLC,Printer,Label Printer, Romote Display,Code Printer,or other external devices,for reading and setup remotely;

USB

- For importing and exporting recipes,works,I/O function communication and other parameters, upgrading system software,customizing boot screen,etc;

12 Input/16 Output

- For staring, stopping, feeding, unloading, clamping/loosening bags,etc;

Modbus TCP

- For connecting PC, PLC, Printers,etc., for reading remotely.

Specification

Model		GM9907-LB
General Specifications	Power Supply	DC24V
	Operating Temperature	-10~40℃
	Maximum Humidity	90%R.H without dew
	Test Standard	Class III 6000e,1μV/d
	Power Consume	About 15W
Measurement parameters	A/D converter type	24 bit Sigma-Delta
	A/D Conversion Rate	120/240/480/960 times /per second
	Non-Linear	0.01%F.S
	Gain Drifting	10PPM/℃
	Minimum Sensitivity	0.02μV/d
	Analog Input Range	0.02~15mV
	Display Accuracy	1/100,000
	Power Source for Load Cell	DC5V 125mA(MAX)
	Input Resistance	10MΩ
	Zero Point Adjustment Range	0.002~15mV（load cell 3mV/V）
I/O Interfaces and Communications	12 Input 16 Output, I/O Selectable	
	12 Input, Active-low Start, Emergency stop, Stop, Pause, ZERO, Clear alarm, Change recipe, M-DISC permission, TARE, Clear tare, Manual stir, etc.	
	16 Output, Single drive current 500mA Run, Stopped, Coarse flow, Medium flow, Fine flow, Result waiting, Over/under, DISC, -NZ-, Alarm, Stir, etc.	

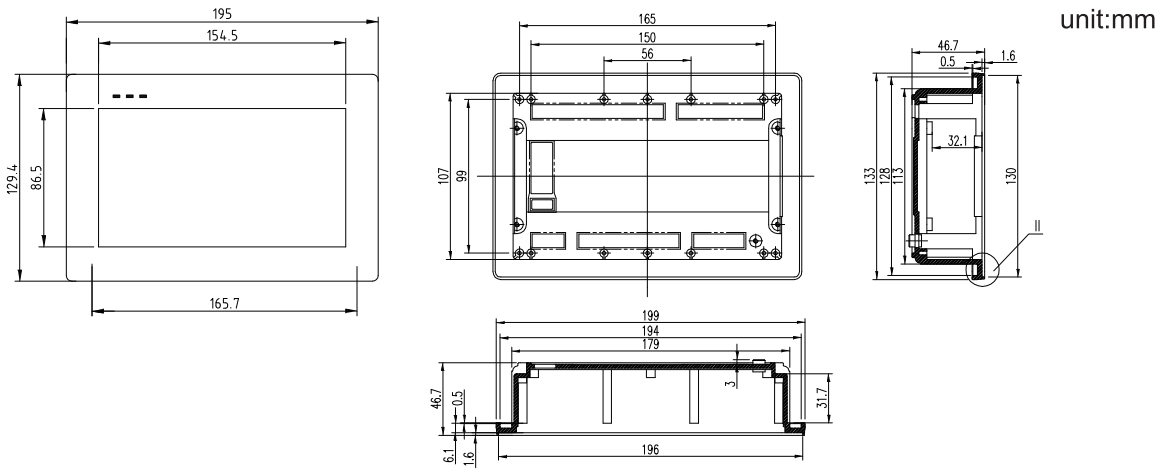

Application Diagram

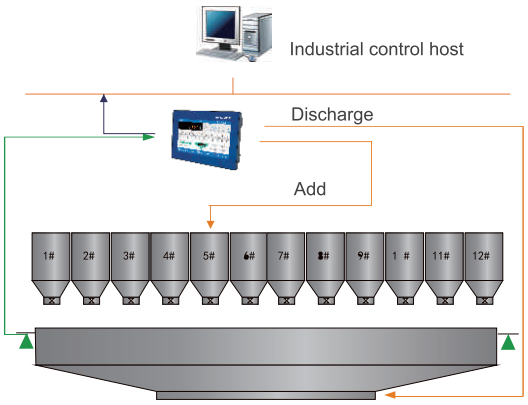

Batching, up to 12 materials