GENERAL MEASURE

杰 • 曼 • 科 • 技

CW-1.2K-101B

Checkweigher

(MCGS+C01 Version)

User Manual

531701010029 Ver A6

Contents

1. Summary 1

1.1 Product Features 1

1.1.1 Mechanical part 2

1.1.2 Electrical part 2

1.2 Usage Notice 2

1.2.1 Precautions 2

2. Product installation 4

2.1 Overall appearance 4

2.2 Mechanical installation 6

2.3 Electrical installation 6

2.4 Electrical interface 8

2.5 Power supply power 12

3. Operation 13

3.1 Operation summary 13

3.2 Basic operation 13

3.2.1 Power-on operation 13

3.2.2 Zero clear operation 15

3.2.3 Start up operation 15

3.2.4 Stop operation 15

3.2.5 Power off operation 15

3.3 User login 15

3.4 Product selection with New 16

3.4.1 Select product parameters 17

3.4.2 New product parameters 17

3.4.3 Modify product parameters 20

3.4.4 Delete product parameters 21

3.5 Calibration scale 21

3.5.1 The weight calibration scale 22

3.5.2 Dynamic calibration of scale 23

4. Data viewing 26

4.1 Check the result data 26

4.2 Statistics 27

4.3 Alarm information 27

4.4 Statistical graph 28

5. Quantity of switches 29

5.1 I/O I/O testing 29

6. Working parameters 36

6.1 Working parameter Settings 36

7. Communication 47

7.1 Communication parameters 47

7.2 Set the parameters of the servo driver 48

8. Program upgrade 49

9. Size 50

9.1 Outline size drawing (unit: mm) 51

10. Equipment repair and maintenance 54

10.1 Maintenance of motors 54

10.1.1 Routine maintenance 54

10.1.2 Regular maintenance 54

10.1.3 Precautions 54

10.2 Check the failure cause and treatment method of weight scale 54

10.2.1 No display on the touch screen 54

10.2.2 Data pulsation large, abnormal fluctuation 54

10.2.3 The display is always zero 55

10.2.4 Abnormal data display 55

10.2.5 Busy alarm 55

10.2.6 Packaging error 55

10.2.7 Continuous nonconformity alarm 56

10.2.8 Excess plugging time 56

10.2.9 Below the minimum sampling time 56

10.2.10 Super maximum sampling time 56

10.2.11 Overload motor load limit 56

10.2.12 Automatic zeroing failed 56

Shenzhen General Measure Technology Co., Ltd.All rights reserved.

Without the permission of Shenzhen Geman Technology Co., LTD., no unit or individual may copy, disseminate, transcribe or translate into other language versions in any form or by any means.

Due to the continuous improvement and update of our products, we reserve the right to modify this manual at any time without prior notice.For this purpose, please visit our website frequently for timely information.

The company's Web address http://www.gmweighing.com

1. Summary

CW-1.2K standard weighing scale is a high speed, high precision and small range industrial automatic weighing scale developed by our company to meet the changing technological update.

The full touch screen makes the CW-1.2K weighing scale easy to operate, external expansion of IO input and output and external serial port communication to achieve multi-point control, monitoring and remote control of the product.

1.1 Product Features

Product parameters;

Model number	CW-1.2K
Power Supply	AC220V±10%, 50/60Hz, 350W
Weighing range	100 to 1200g
Accuracy of weight inspection	Plus or minus 0.7 g
Weight checking speed	200 pieces/min
Size of object to be measured	Length: 50~300mm Width: 20~220mm Height: 10~220mm
Conveyor belt speed	5 to 50 m/min
Belt size	400mm*250mm
Center distance of drum shaft	400mm
Countertop height	750 (±50mm) (customizable)
Operating temperature	0 to 40ºC
Maximum humidity	90% R.H non-dew forming
Ultimate load	The instantaneous ultimate load shall not exceed 2.4kg

Note;Scale stands are strictly prohibited from being used over the range.

1.1.1 Mechanical part

1. Electric control box is small and movable, easy to install and operate on site.
2. The servo driver is used as the motor driving device to ensure the speed stability and adjustability in the process of weight checking.
3. Double photoelectric mode more accurately determine the object up and down the weighing platform, improve the accuracy and efficiency of weight detection.
4. The height adjustment range of the weighing table is larger, which is convenient for customers to choose and use.
5. The mechanical modular design makes transportation and maintenance more convenient, and the application adaptability stronger.

1.1.2 Electrical part

1.Simple wiring, external only need to access the power cord;The internal use of different specifications pin plug terminal block, wiring is convenient and will not make mistakes.
2.Touch screen operation interface optimization, product parameter setting is simple and the main interface content is richer.
3.The three-color indicator shows qualified (green), out-of-tolerance (red), undertolerance (yellow), and the working state of the inspection weight is clear at a glance.Buzzer user can define the alarm mode.
4.The new algorithm is adopted in the process of weight inspection, and the high precision can be guaranteed in the process of high-speed weighing.
5.Optimize user login and logout function, without tedious operation and effectively prevent others from misoperation.

1.2 Usage Notice

1.2.1 Precautions

1.Do not perform mechanical or electrical maintenance while live, do not place tools on the scale, and do not perform welding operations on the scale.
2.The installation site must ensure the ground level, after installation through the foundation adjustment, ensure that the weighing table level, tilt does not exceed 0.5 degrees, away from the vibration source.
3.Make sure the equipment is safely grounded and there is no strong electricity or magnetic field interference nearby.
4.Do a good job of fire prevention, avoid direct sunlight to check the weighing table

and relatively strong air flow (outdoor air, fan and air conditioning outlet is directly against the weighing table).

5.Should avoid squeezing, stepping on the scale platform, handling should first fixed scale, installed sensor limit to prevent damage to the sensor, prohibit the direct handling of the scale platform to move.

2. Product installation

2.1 Overall appearance

The product appearance is shown in Figure 2-1 below.

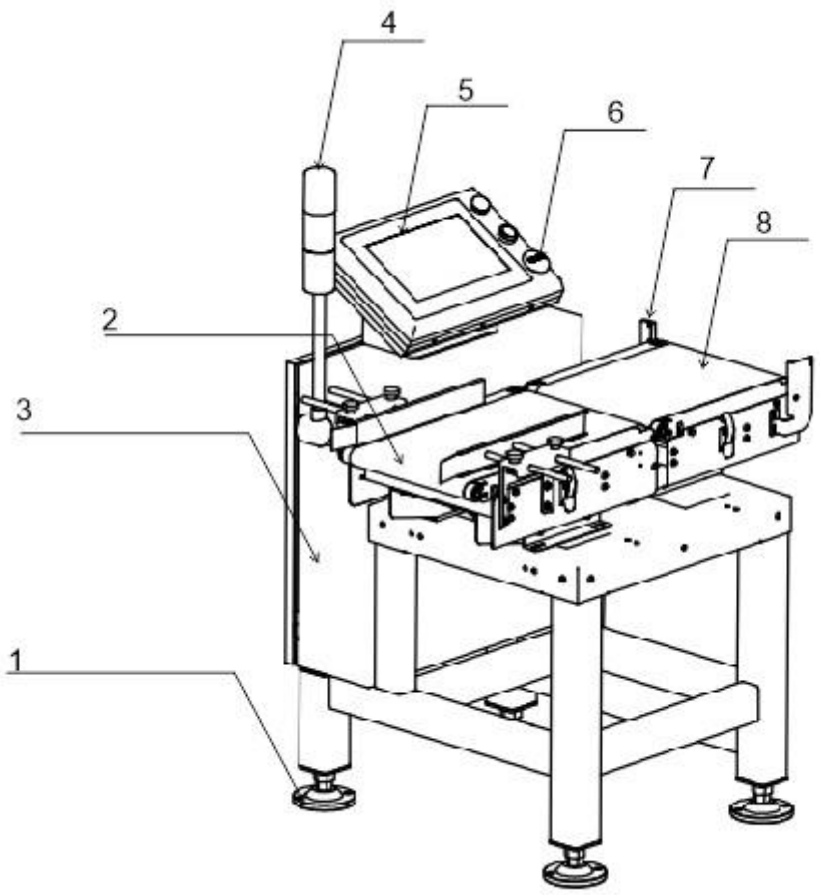

Overall appearance of Low box version

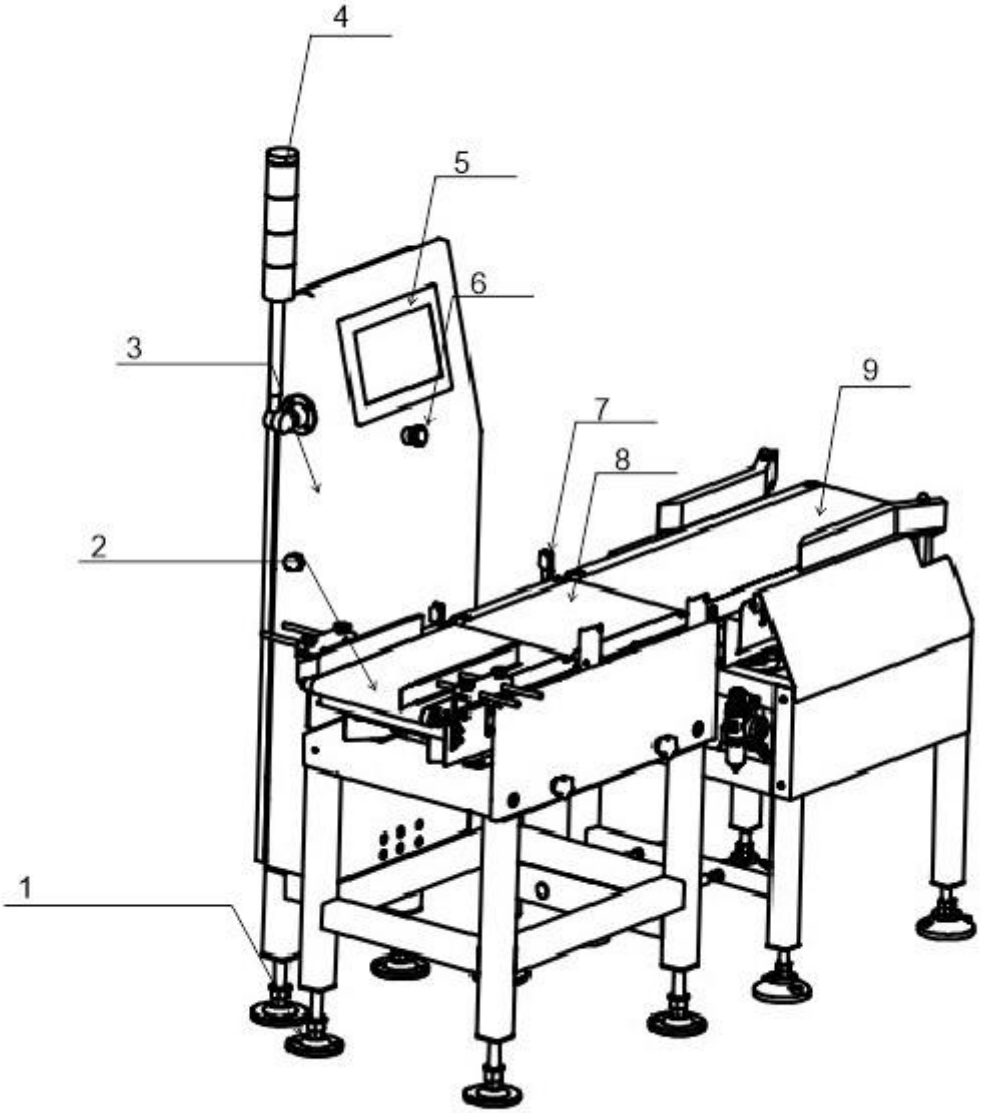

Overall appearance of High box version

Serial number	Name	Introduction
1	Indicator light	A more intuitive display of the test results, so that the distance can also see the results of the state.
2	Conveyor belt	The conveying end of the weighing platform on

		the object
3	Electric control panel	Control the weight inspection process and connect external devices
4	indicator light	More intuitive display of the weight inspection results, allowing the status of the results to be seen from a distance.
5	touch screen	View display data and set product parameters
6	Emergency stop button	Emergency stop
7	Photoelectric switch	Judge the weight table of the object up and down
8	Weighing platform	Weighing objects
9	Remove the end belt	Unqualified products will be eliminated at this location

2.2 Mechanical installation

Place the weighing scale at the installation place and remove the sensor protection device;Adjust the levelness of the weighing scale, and the inclination shall not exceed 0.5 degree;Fix the footing of the weighing scale, the stainless steel footing contacts the ground smoothly, and lock the screws of the footing to ensure the stability of the weighing scale.

Adjust the distance between the check weighing platform and the front and rear end conveying mechanism is 9 ~ 11mm, and the check weighing platform shall not be in contact with other equipment.If the front and back end conveying mechanism is not equal to the height, it is necessary to add the oblique conveying mechanism on one side, and add the horizontal conveying mechanism connection on the side of the oblique mechanism (to leave a gap) to check the weight scale platform, to ensure that the check weight scale platform level and the height of the front and back end conveying mechanism.

The electric control box can be arbitrarily installed on the left and right sides of the weighing scale to facilitate the operation of the production process.

2.3 Electrical installation

The power supply is inserted into the three-hole socket with ground or connected to the power supply equipment such as the electric gas cabinet according to the line mark.

1. Any wiring and disconnecting operation can only be carried out after power off. After the operation is completed, check before power on.

2.The serial port is fixed to RS485 communication, where the 485(A) pair should be connected to 485(A) or 485(+), and the 485(B) pair should be connected to 485(B) or 485(-).

3.The switching quantity input point is valid at low level (DC0V) and does not allow access to high voltage or alternating current.

4.Switching quantity output point access relay coil for intermediate control, so the other end of the relay can access DC or AC power supply switching quantity.

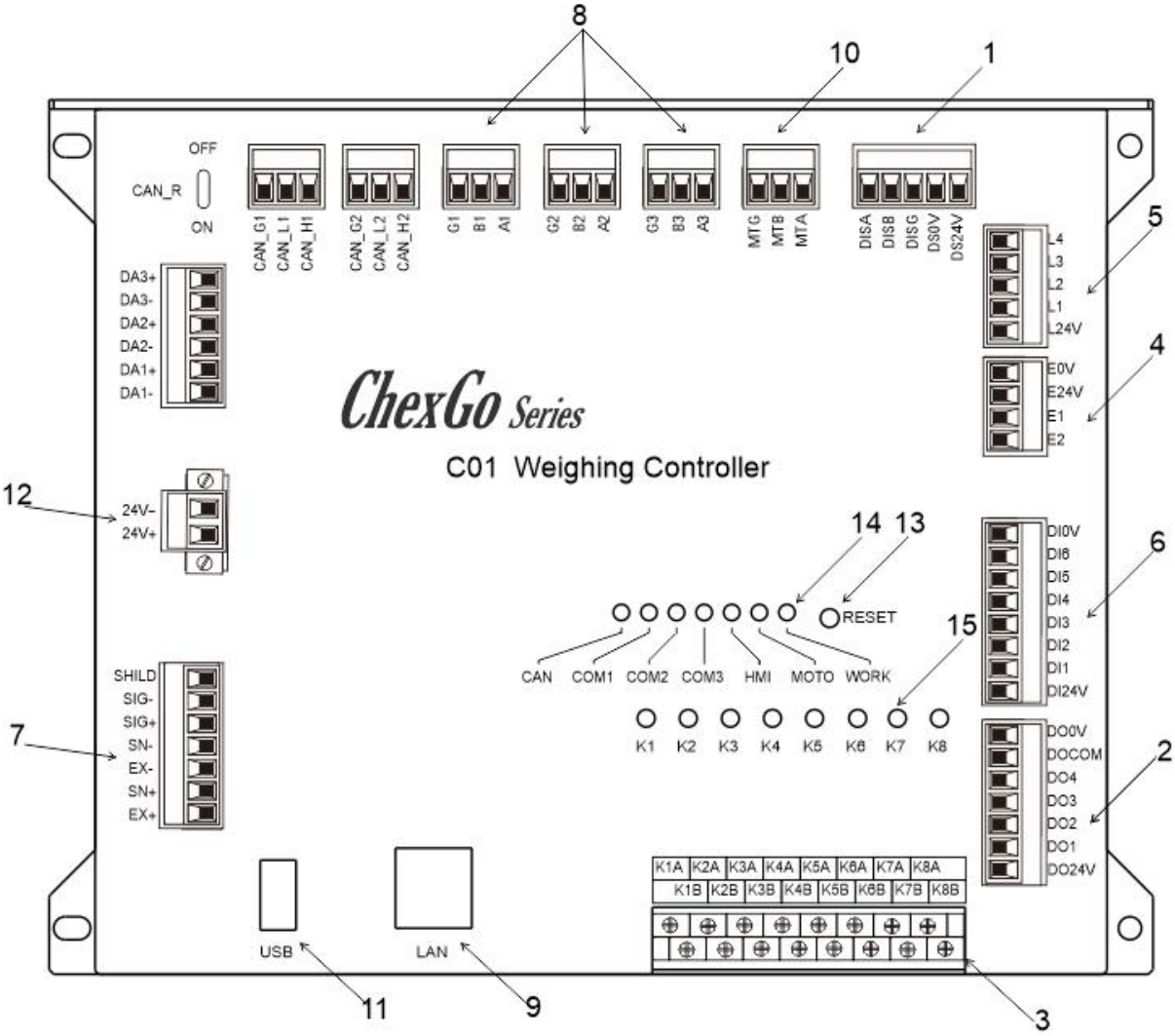

Figure 2-2 Control panel of weighing scale

Serial number	Function

1	Touch screen communication jack
2	External custom outlet OUT1-OUT4
3	External custom output relay K1-K8
4	Detect the photoelectric sensor wiring terminals
5	Alarm light wiring terminals
6	Custom input ports 1-6 externally
7	Sensor terminal
8	External RS-485 communication jack
9	External TCP/IP communication network port
10	Inverter communication jack
11	External USB data interface
12	24V power terminal
13	Reset key
14	Communication status indicator
15	Output relay status indicator light

2.4 Electrical interface

Photoelectric sensor (already wired at factory) :

E24V: photoelectric sensor DC24V+.

E0V: photoelectric sensor DC24V-.

E1: Signal input of photoelectric sensor for loading of weighing scale.

E2: Check the output photoelectric sensor signal input of the weight balance.

Alarm light (has been connected when leaving the factory) :

L24V: Alarm light DC24V+, maximum output power 2VA.

L1: Buzzer.

L2: When the detection result is out of tolerance, the low output is valid until the next check begins.

L3: When the test result is qualified, the low output is valid until the next check begins.

L4: When the detection result is inferior, the low level output is effective until the next check starts.

Input (function can be customized, onsite connection according to actual demand) :

DI1: running input. In the stopped state, the input is valid and the system enters the running state.

DI2: Stop input. In the running state, the input is valid and the system enters the stop state.

DI3: clear the alarm. When the system generates an alarm, change the input to be effective and the alarm will be cleared.

DI4: out-of-tolerance elimination is completed. When the input is valid, the output of out-of-tolerance elimination is invalid.

DI5: Undererror culling is complete, undererror culling output is invalid when this input is valid.

DI6: continuous packet detection. This input signal is given by the photoelectric sensor installed on the front conveyor line of the weighing scale and used in conjunction with the busy stop output to control the start and stop of the front conveyor line of the weighing scale. When there is an object being detected on the weighing platform and the signal is effective, the busy stop output is effective.

DI0V: switching quantity power supply DC24V-.

DI24V: Switching quantity power supply DC24V+.

4 transistor outlet (function can be customized, on-site according to the actual demand connection) :

DO1: No definition.

DO2: undefined.

DO3: undefined.

DO4: undefined.

DO0V: switching quantity supply power DC24V-.

DO24V: switch quantity power supply DC24V+.

DOCOM: switch quantity common end.

Sensor (already connected at factory) :

EX+ : Power positive, SN+ : induction positive, EX- : power negative, SN- : induction negative, SG+ : signal positive, SG- : signal negative.

Motor speed control communication interface (RS485) :

MT A: RS485 communication A.

MT B: RS485 Communications B.

MT G: RS485 Communication (GND).

8-way relay outlet (function can be customized, on-site connection according to actual demand) :

K1: defined as operation. When the system is in operation state, the relay output is closed, and K1A and K1B are switched on.Used to control the start and stop of frequency converter.

K2: defined as stop. When the system is in the stopped state, the relay output closes and K2A and K2B are switched on.This definition is the factory default setting and can be modified according to the actual needs.

K3: defined as out of tolerance elimination, the product test result is out of tolerance, and within the range of out of tolerance elimination duration, the relay output is closed,K3A,K3B switched on.

K4: defined as undererror elimination, the product test result is undererror, and within the range of undererror elimination duration, the output of the relay is closed,K4A,K4B on.

K5: defined as alarm. When the system gives an alarm, the output of the relay is closed, and K5A and K5B are switched on.This definition is the factory default setting, and can be modified according to the actual demand.

K6: defined as batch completion, after the completion of the product test batch, the relay output is closed,K6A,K6B on.This definition is the factory default setting, and can be modified according to the actual demand.

K7: defined as qualified indication, after the product test is qualified, the relay output is closed,K7A,K7B on.This definition is the factory default setting, and can be modified according to the actual demand.

K8: defined as unqualified excluded. When unqualified occurs in the test result, the relay output is closed, and K8A and K8B are switched on.This definition is the factory default setting, and can be modified according to the actual demand.

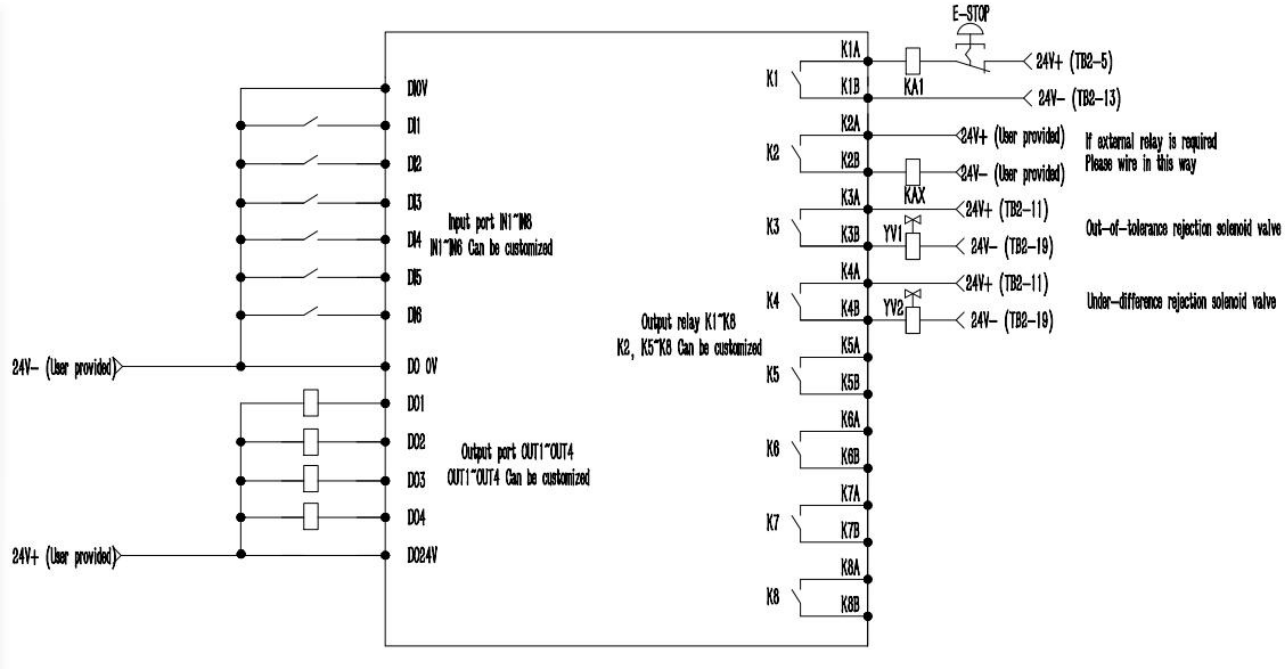

Figure 2-3 Schematic diagram of inlet and outlet connections

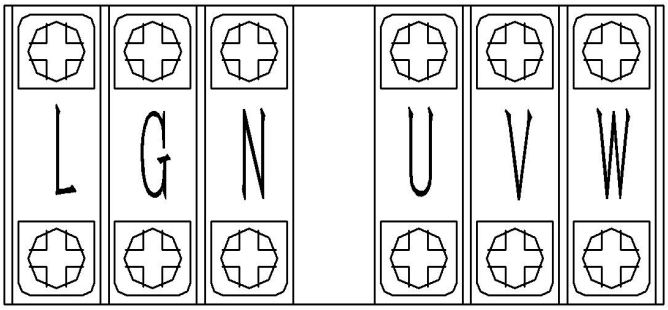

Figure 2-4 Power supply and motor interface diagram

Figure 2-4 shows the power supply and motor interface diagram, defined as follows:

External power supply (already connected at factory) :

L: external AC power live wire.

G: external AC power ground cable.

N: neutral wire of external AC power supply.

Frequency converter output power supply (factory has been connected) :

U: Corresponding to the U terminal connected to the motor.

V: corresponds to the V terminal connected to the motor.

W: corresponds to connect the motor W terminal.

Note: L, N and G are the external AC power supply, and U, V and W are the output power supply of the inverter to power the motor. These two groups of power supplies have been connected before delivery. If the frequency converter or motor needs to be reconnected in the subsequent use and maintenance process, please be sure to connect correctly according to the instructions, and remember not to connect it backwards, otherwise it will cause damage to the frequency converter.

2.5 Power supply power

AC220V±10%, 50/60Hz, 350W.

3. Operation

3.1 Operation summary

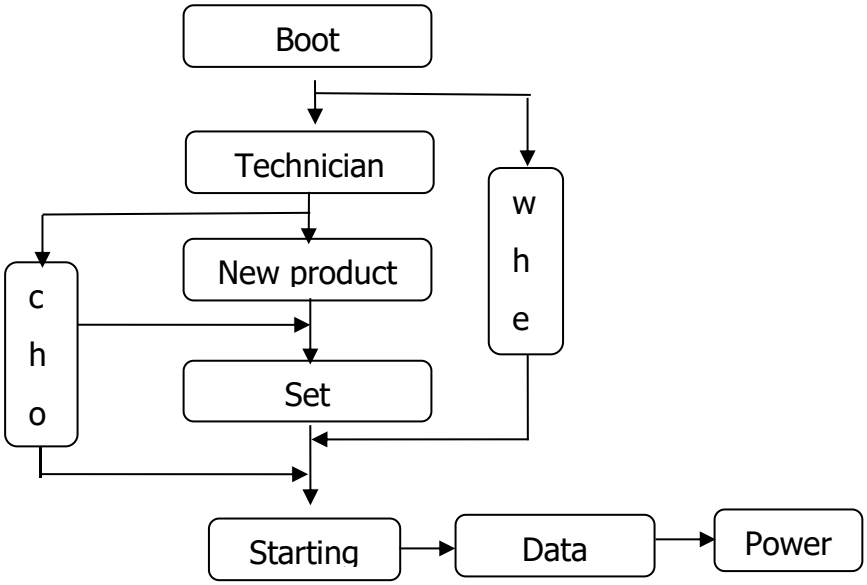

Figure 3-1 Procedure

3.2 Basic operation

The main interface of weight inspection is used for daily production, which is used to start and stop the weight inspection belt, enter the relevant parameter interface and display the basic information of the tested product and the weight inspection result.

3.2.1 Power-on operation

Turn on the power and turn the knob switch to the "1" position and the boat type switch to the O position.The touch screen on the electric cabinet displays the initialization interface.At the top of the interface are USB insert mark, check scale model and time display;The black display area is the name of the current production inspection product, the weight display area, the weight unit display area and the weight check scale status display area;In the middle is the current setting of weight checking speed, the current actual weight checking speed and the display statistics of weight checking results;At the bottom are the function keys of the operation of the weight check scale and the parameters related to the weight check.

- Correct time parameters can effectively help users check the production inspection results, relevant production parameter changes and alarm information, help to improve the production pass rate and production speed and reduce production consumption.
- The weight display area of the weighing scale displays the real-time weight value in the

stopped state, and displays the weight test result in the running state until the next object is effective.

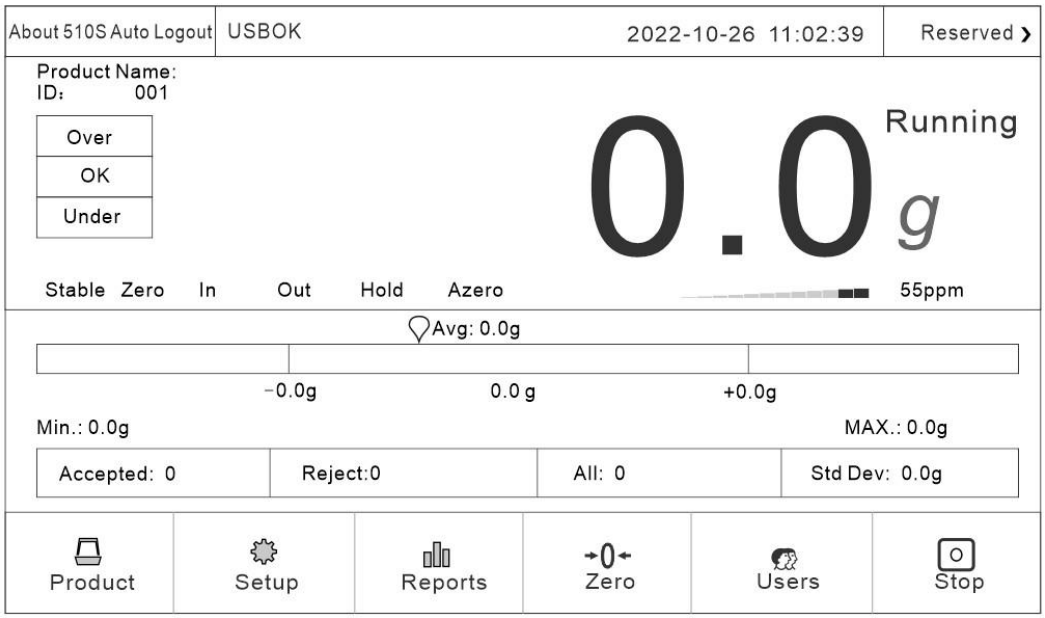

Figure 3-4 Power-on initialization interface

Button and operation frame operation instructions (applicable to all operation interfaces of the device) :

1. Product Click this button to enter the interface of creating products and setting product parameters.

2. Setup Click this button to enter the parameter setting interface.

3. Reports Click this button to enter the data interface to view the relevant check data.

4. Zero Click this button to clear zero.

5. Users Click this button for user management operations.

6. Stop Click this button to start and stop the device.

7. 0 g Click this type of action box to modify the value of this item.

8. 192 Click the action box to modify the value of this item.

9. None Click this type of action box to select Settings for this definition.

10. Change Click this type of action box to perform the corresponding operation.

11. Click this type of action box to open and close the corresponding function Settings.

3.2.2 Zero clear operation

If the touch screen displays the real-time weight value of the weighing scale in the stopped state is not zero (zero indicates the off state), click "Clear zero" to clear the weighing platform, so that the real-time weight value is displayed as zero, and then the zero indicates the on state.(It can be operated only in the stopped state).

If the weight check scale shows that the weight is unchanged, the stable identifier bit is on; otherwise, the stable identifier bit is off (the stable identifier bit is only related to the weight state, and has nothing to do with the operation of the weighing scale and the size of the weight value).

3.2.3 Start up operation

Click "Start" on the touch screen to start the weight checking scale, and the weight checking motor drives the weight checking belt to rotate. At this time, the operation label on the touch screen is "Running", and the weight checking operation can start.

3.2.4 Stop operation

Click "Stop" on the touch screen to stop the weight inspection belt and end the weight inspection process. At this time, the operation label on the touch screen is "Stopped".

3.2.5 Power off operation

Turn knob switch to "0" position, touch screen off, disconnect power.The above operations can only be performed when there is no weight product on the weighing scale.

3.3 User login

Under the touch screen initial interface, click "Product" or "Settings" to pop up the password login box, select the user to enter the corresponding password and click "Confirm" to log in.The initial passwords of the operator and administrator are written in the user description.

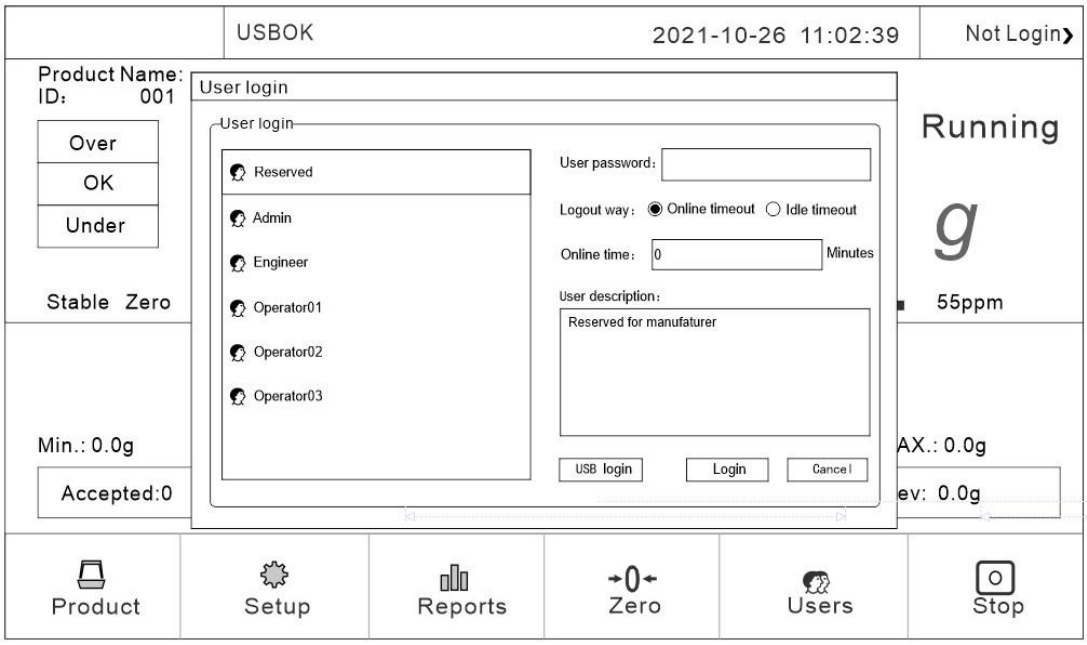

Figure 3-5 Password input box

3.4 Product selection with New

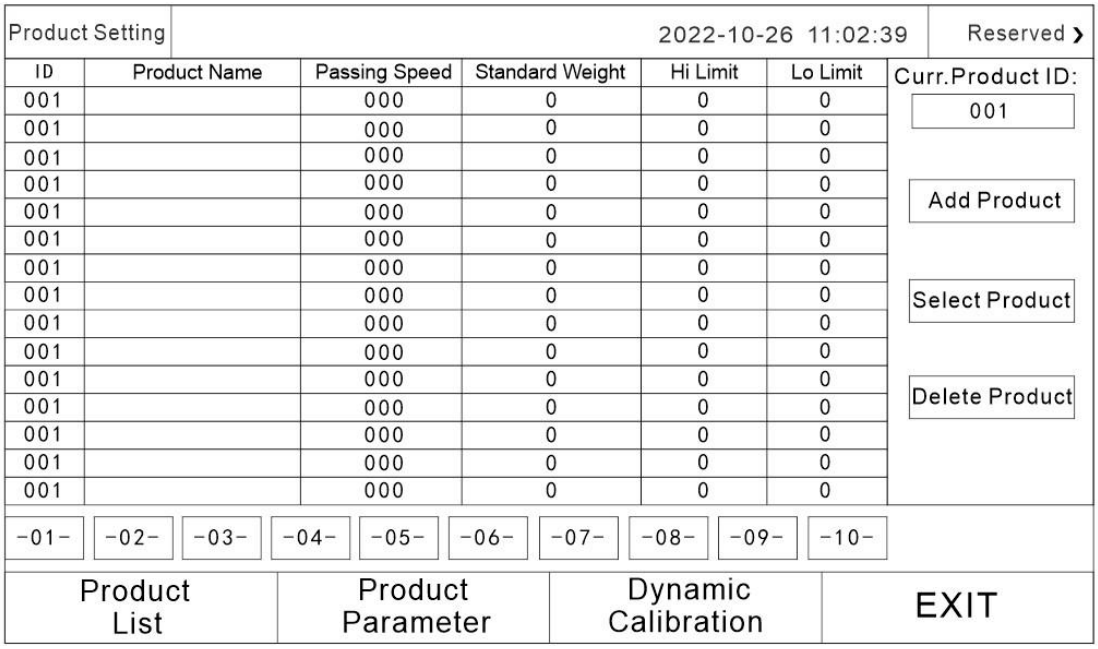

Figure 3-6 Product list

3.4.1 Select product parameters

Click "Product" under the main interface to enter the product list interface. First, click the product to be checked in the product list, then click "Select Product" to select the product, click "Exit" to go to the main interface and click "Start" to check the product.

- After the product is successfully selected, the current number will be displayed as the number of the selected product in the upper right corner of the product list page.
- The new product number cannot be selected during the operation of the weight check scale;By default, the product number selected by the weighing scale before exit (stop operation or the weighing scale power off).

3.4.2 New product parameters

On the product list page, click "Add Product" to jump to the "Product Parameters" interface to add a new product parameter. The new product number will be added to the existing product in sequence. You do not need to select the product number.For details, refer to "Operation Instructions on Buttons and Operation Frames" in Section 3.3.2.

★ The new product number cannot be added during the operation of the weight check scale;The newly added product parameter values are the default initial values of the system, which need to be set according to the actual product parameters and production requirements.

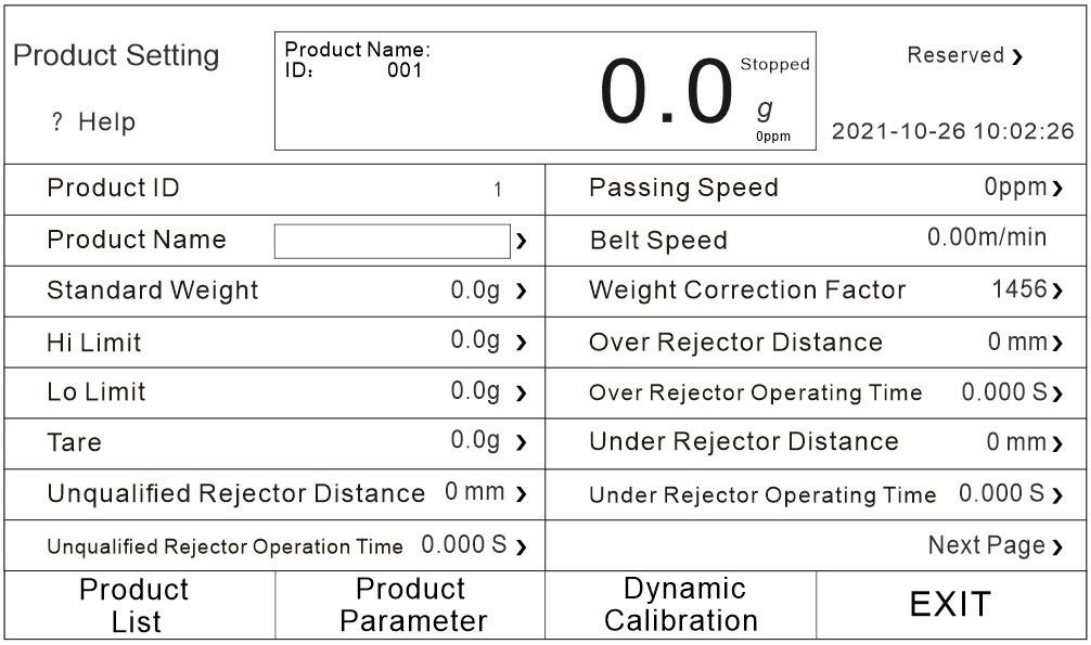

Figure 3-7 Product parameters screen Example

Description of product parameters:

Name	Instructions
Product number	Number of the product under inspection
Speed of weight inspection	The speed at which the current weight checking device detects the product
Product name	Name of the product under inspection
Belt speed	Weigh the speed at which the belt is running
Standard weight	The standard weight of the product to be checked
Upper limit	In the process of weight inspection, if the weighing value is greater than the target value + the upper limit value, it will be judged as out of tolerance
Lower limit value	In the process of weight inspection, if the weighing value is less than the target value-lower limit value, it will be judged as undererror
Tare weight	The weight of the item's outer packaging
Qualified culling distance	The distance traveled by the product from the end of the scale to the start of the qualified culling mechanism
Duration of qualified culling	The duration of the qualifying cull mechanism's action
Out-of-tolerance culling distance	The distance traveled by the product from the end of the scale to the start of the offset removal mechanism
Underweight culling distance	The distance traveled by the product from the end of the scale to the start of the underbalance removal mechanism
The out-of-tolerance culling action time	The duration of the kill mechanism's action
Undershoot culling action time	The duration of the underkill operation
Unqualified culling distance	The distance traveled from the end of the scale to the nonconforming product after the start of the removal mechanism
The time of the unqualified culling	The continuous action time of the rejection mechanism for

action	nonconforming products (including out-of-error + undererror)
ADC Sampling Rate	120 samples/sec, 240 samples/sec, 480 samples/sec
Product Barcode	Used to automatically switch products after barcode entry
Correction factor	Standard no correction is 1000. Correction factor =1000+(actual weight - test weight result)/ min indexing. That is, if the weight test result is light, the correction factor is the number greater than 1000, if the weight test result is heavy, the correction factor is the number less than 1000
Total lot	Total number of pieces of heavy product inspected
Qualified batches	Number of eligible batches of products
Sampling starting percentage	The sampling data to this percentage is discarded after the object is placed on the scale
Percentage used for sampling	Data that is consistently used as a percentage from the start of sampling is used to calculate the weight check result
Dynamic zeroing filter grade	Filtering parameters in the weighing process
Dynamic clearing stability range	When the belt is running, within the stability determination time, the weight variation range is judged to be stable within this setting value, and only when it is stable can dynamic zeroing be allowed
Dynamic zeroing and stabilizing time	When the belt is running, within this setting value, the range of weight variation is judged as the stability of the scale platform within the range of dynamic zero clearance stability. Only when the stability allows the dynamic zero clearance
Maximum sampling time	Maximum sampling time during weighing
Dynamic Zero Failure Alarm Count	Number of dynamic zero failures during weighing to trigger an alarm
Detection Distance Threshold	Metal Detection Distance Threshold (Used to Derive Corresponding Detection Time Threshold)
Distance from Infeed Photoelectric Sensor to	Distance from Infeed Photoelectric Sensor to Metal Detector

Metal Detector	
Average feeding times	When servo control is carried out, the average value of the set number of products is compared with the user's set value, and the difference between them is used as the basis of control.When it is 0, there is no need to fill the servo function
Servo pulse frequency	The pulse frequency value of the servo motor
Number of product delays	Equivalent to the number of objects from the charging machine to the photoelectric switch of the weighing scale.Also refers to the number of products passed before the next correction
Servo charging sensitivity	This setting is the adjusted weight corresponding to each correction pulse
Servo target value	Equivalent to the target value of package inspection weight
Exclusion of servo upper limit	When the weight is higher than this value, it does not participate in the average calculation and will generate an alarm
Exclude servo lower limit	When the weight is below this value, it does not participate in the average calculation and will generate an alarm
Servo dead zone	If the absolute weight error is less than this, no correction is made
Maximum servo modulation	Means the maximum allowable modulation correction
Exclude servo upper limit alarm stop	Exclude the servo upper limit alarm to stop
Exclude the servo lower limit alarm to stop	Exclude the servo lower limit alarm to stop
Failure to correct alarm stop in time	Failure to correct alarm stop in time

3.4.3 Modify product parameters

On the Product list page, select the product whose parameters you want to modify from the product list and click "Product Parameters" to enter the product parameters

interface to modify the selected product parameters (the newly added product directly jumps to the product parameters interface).

- The standard weight refers to the weight of the product to be checked, and the upper and lower limit is the allowable deviation value of qualified product;If it is not necessary to calculate the packaging weight of the product, the outer packaging weight of the product can be written into the tare weight column, and the net weight should be filled in the standard weight column.
- The product number is automatically generated by the system;The linear speed of the belt is calculated from the detection speed, and changes with the change of the detection speed. It cannot be filled in (the linear speed of the belt should be consistent with the linear speed of the front and rear end conveying mechanism).
- The compensation weight difference value is calculated by dynamic calibration. Under normal circumstances, manual change is prohibited to prevent deviation between the product weight and the actual weight.
- When filling in the product parameters, attention should be paid to its value range. Generally, if it is lower than the lower limit of the parameter range, the parameter value will remain unchanged; if it is higher than the upper limit of the parameter range, the upper limit of the parameter range will be written by default.
- The definition of weight checking speed, belt speed and correction coefficient is described in detail on the help interface of product parameters. If necessary, you can click "Help" to view.

3.4.4 Delete product parameters

On the product list page, select the product to be deleted and click "Delete Product" to delete the product. After deleting the product, the following product parameters will move forward in order, and the product number will move forward.The product cannot be deleted during the operation of the weight check scale;In order to prevent product parameters from being incorrectly deleted, the product name should be set reasonably when setting product parameters.

3.5 Calibration scale

In order to ensure the correct weight of the weighing scale and the linearity of the weight change, each weighing scale needs to carry out weight calibration and dynamic calibration.For specific operation methods, please refer to "Operation Instructions on Buttons and Operation Frames" in section 3.3.2.

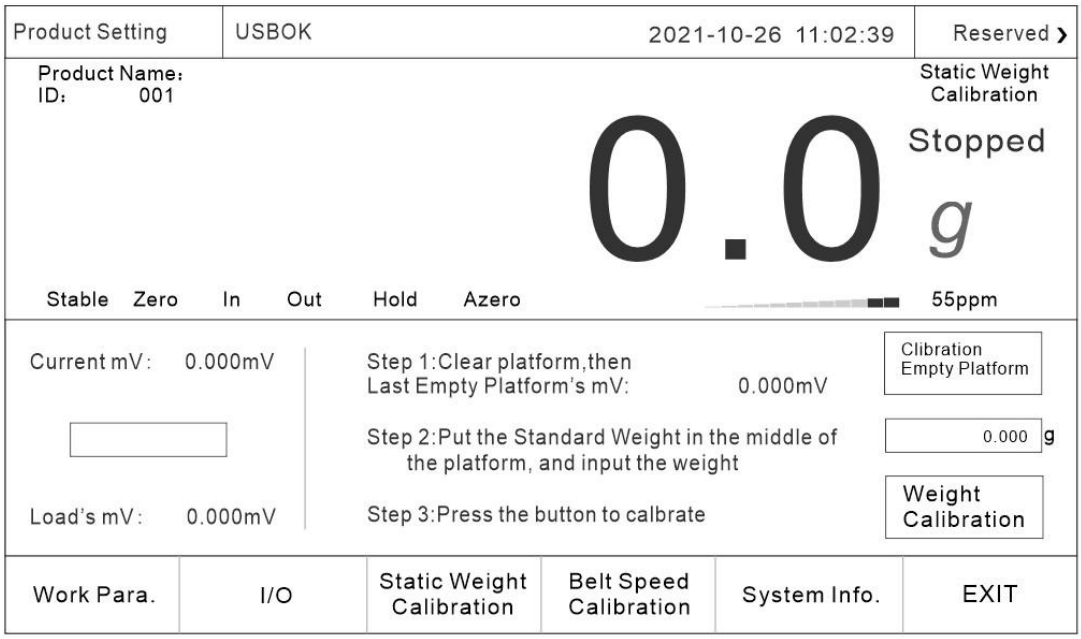

Figure 3-11 shows an example of the weight calibration interface

Description of static calibration parameters:

Name	Instructions
Calibrate the empty scale table	Eliminate external interference, the scale table at zero and stable, can be clicked
Calibrate the scale weight	Enter the weight of the calibration weight
The weight calibration scale	Put the weight on and after entering the weight of the weight, click
Current voltage value	The current voltage value of the sensor
Empty scale voltage value	The voltage value of the sensor when the top of the scale is emptied
Weight voltage value	The voltage value of the sensor after placing the weight

3.5.1 The weight calibration scale

In the setting page, click "Static calibration" to enter the interface of weight calibration, follow the steps on the touch screen to calibrate the scale, and click "Exit" to return to the

main interface after the calibration is completed.For specific operation methods, please refer to "Operation Instructions on Buttons and Operation Frames" in Section 3.3.2.

- During calibration, ensure that the weighing scale is in the stopped state; otherwise, the interface of the weighing scale cannot be entered;Calibration should ensure that there is no item on the weighing platform, no vibration on the weighing platform, and no relatively strong air flow around the weighing scale.
- When the weighing platform is empty, ensure that the weighing platform is at zero position and stable. Otherwise, please eliminate interference and click "Calibrate the weighing platform". The second step can only be carried out when the touch screen indicator is 0 and the stability sign is lit.
- When placing the weight, try to avoid the weight hitting the surface of the weighing platform. Enter the correct weight into the weight box of the weighing platform, otherwise it will lead to inaccurate calibration scale or calibration failure (the weight of the weighing platform should be greater than the product weight and not exceed the maximum range of the weighing scale).
- If the calibration fails, please check whether the scale is stable and whether the sensor is interfered by the outside world or whether the scale is in contact with other equipment, and re-calibrate after troubleshooting.

3.5.2 Dynamic calibration of scale

On the product page, click "Dynamic calibration" to enter the dynamic calibration interface, and perform dynamic calibration according to the text prompts. When completed, relevant parameters will be automatically calculated and generated and product parameters will be written.Click "Exit" to return to the main interface after completion of calibration.For details, please refer to Section 3.3.2 "Operation Instructions for Buttons and Operation Frames".

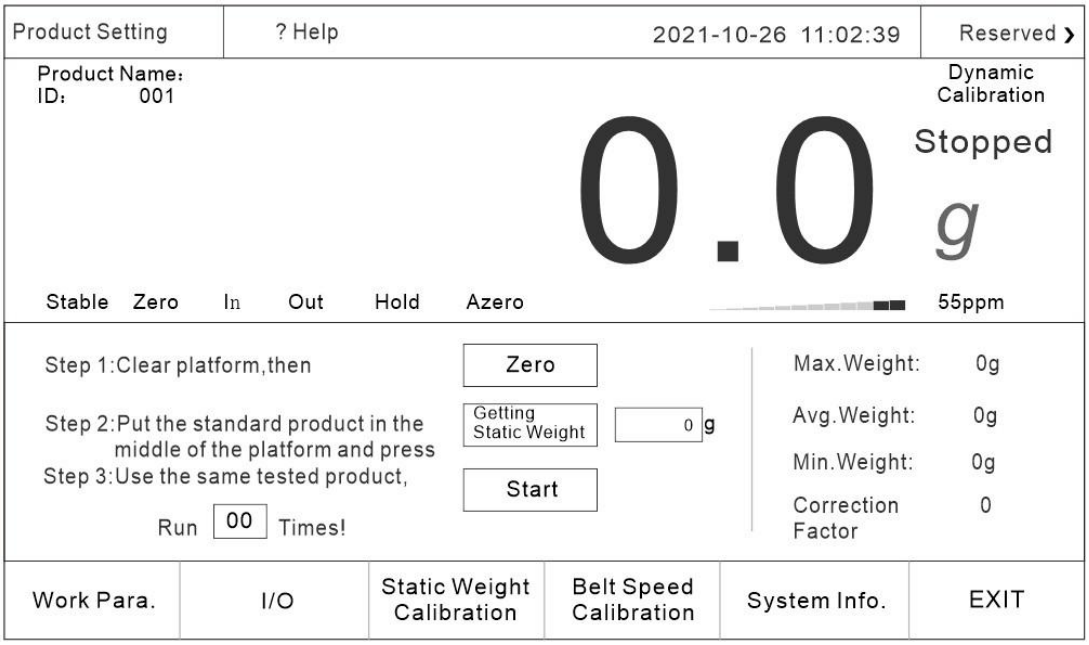

Figure 3-12 Dynamic calibration screen example

Description of dynamic calibration parameters:

Name	Instructions
Zeroing	Clear the current weight value to zero
Get the weight	Stop the belt running and put the test material on after the static weight value shown
Dynamic calibration times	The number of repeated runs of dynamic calibration. The default is ten, and no less than five are recommended
Start up	The belt will run, and after the statically weighed object has passed, it should be moved back to the front stage, repeatedly running dynamically, and the controller will automatically record the dynamic weight. General dynamic calibration ten times, the number of dynamic calibration to check the weight scale will automatically stop
Maximum weight	The maximum value of the weight check result during dynamic calibration
Average weight	During dynamic calibration, the average weight of each check will be updated after the number of dynamic calibration is completed

Correction factor	The standard value is 1000. After the number of dynamic calibration is completed, the controller will automatically calculate this value according to the dynamic result and static weight. If it is not convenient for dynamic calibration, you need to enter this value manually, which can be set in the product parameter interface, and fill in the size of the value refer to the method in the dynamic calibration parameter help interface

- Calibration must ensure that the check scale in the stopped state, otherwise can not enter the dynamic calibration interface;When calibrating, ensure that there is no item on the scale, no vibration on the scale, and no relatively strong air flow around the scale.
- When the weighing platform is empty, it should be ensured that the weighing platform is at zero position and stable, otherwise, please eliminate external interference and carry out "zero clearing" operation.
- When placing the product, the product should avoid hitting the surface of the weighing platform. Only after the weight is stable can you click "Obtain static weight";If the product has a gross weight value, please set the gross weight value first before dynamic calibration.
- The default value of learning times is 10. If the learning result is not accurate, you can increase the learning times appropriately.If the production requirement is not high, the learning times can be appropriately reduced to improve the learning speed;External interference should be avoided in the learning process, and the system will automatically save the learning results and display them after the completion of learning.
- The change of product detection speed requires dynamic calibration again.
- The principle of dynamic calibration, attention to implementation and alternative methods are introduced in detail in the interface of dynamic calibration parameter help. If necessary, you can click Help to view.

4. Data viewing

This check weight scale has data storage and query function, convenient for users to check the historical check weight data and event information.Under the main interface, click "Data" to enter the interface for viewing data (no permission is required for data interface).

4.1 Check the result data

In this interface, you can view the weight check time, weight check result and product code. When the weight check scale stops, insert the USB disk into the touch screen and click "Export data" to export all the weight check data to the USB disk;Click "Delete data" to delete all the current weight data;Click "Next page" or "Previous page" to review the duplicate data (in running state, only the duplicate data can be viewed, and the operation of "Export data" and "delete data" cannot be performed).For specific operation methods, please refer to "Operation Instructions on Buttons and Operation Frames" in Section 3.3.2.

- After testing a certain number of products, you can insert the USB flash drive to the touch screen to export the existing weight data, otherwise too much weight data will cause inconvenience to data query.
- Changing the production of the product and adding new products will not affect the query of the test result, delete the product, please first check out the test result and clear.

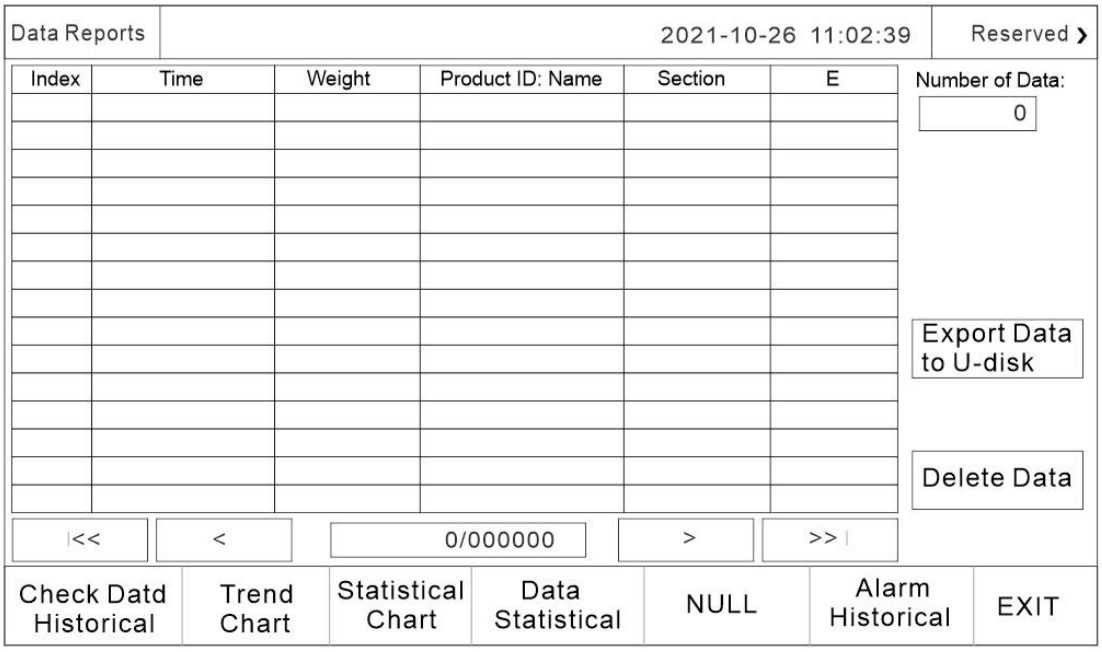

Figure 4-1 Example of the weight check data page

4.2 Statistics

Click "Statistics Data" to enter the check weight data statistics interface, which displays product distribution intuitively. Click "Print data" to print statistics information, click "Export data" to export statistics information to the USB disk inserted into the touch screen, click "Delete data" to clear statistics information.For specific operation methods, refer to "Operation Instructions on Buttons and Operation Frames" in Section 3.3.2.

- Statistics include out of tolerance, under tolerance, the cumulative number of inspection times of qualified products, weight, average value and probability distribution, etc.
- Before testing a new batch of product, the previous statistics should be cleared, otherwise the new product will accumulate on the original statistics and generate incorrect statistics.

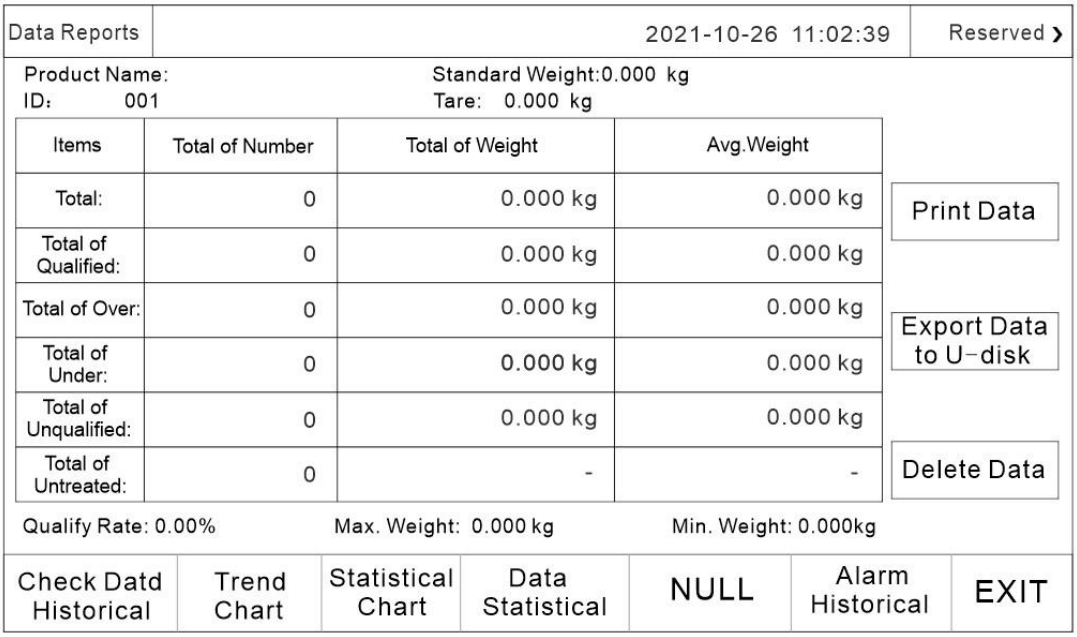

Figure 4-2 An example of the statistics page

4.3 Alarm information

Click "alarm record" to enter the interface for viewing alarm records, and you can view the alarm information in the process of weight inspection, including alarm serial number, alarm time, number and alarm content.For specific operation methods, please refer to "Operation Instructions of Button and Operation Frame" in Section 3.3.2.

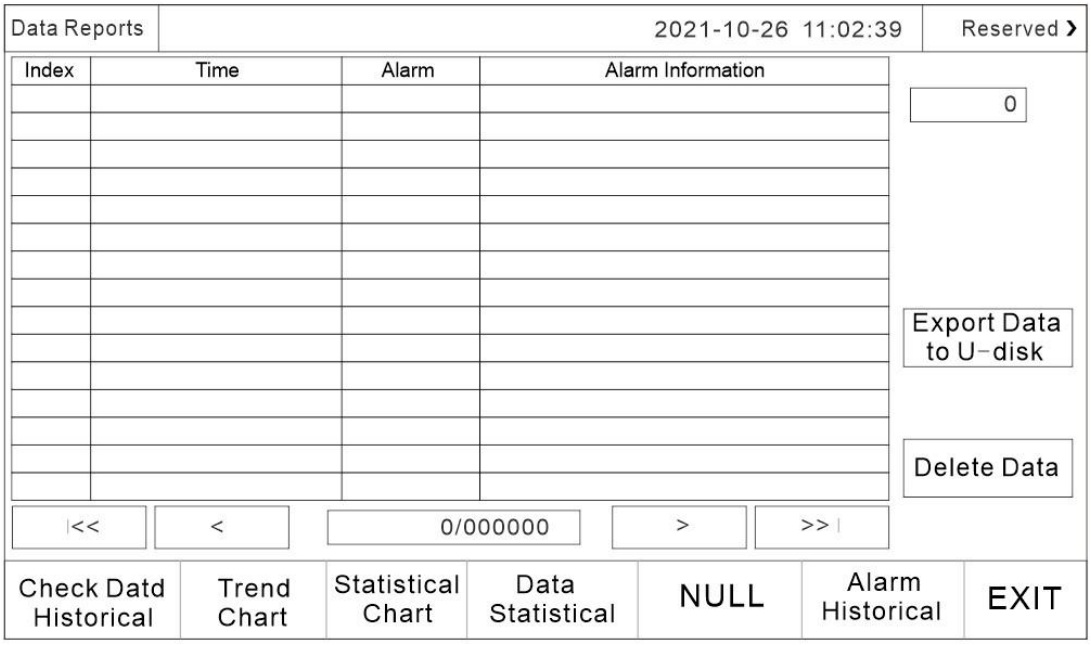

Figure 4-3 Alarm information screen example

4.4 Statistical graph

Click "Statistical Chart" to enter the statistical chart interface to visually view the product weight distribution.

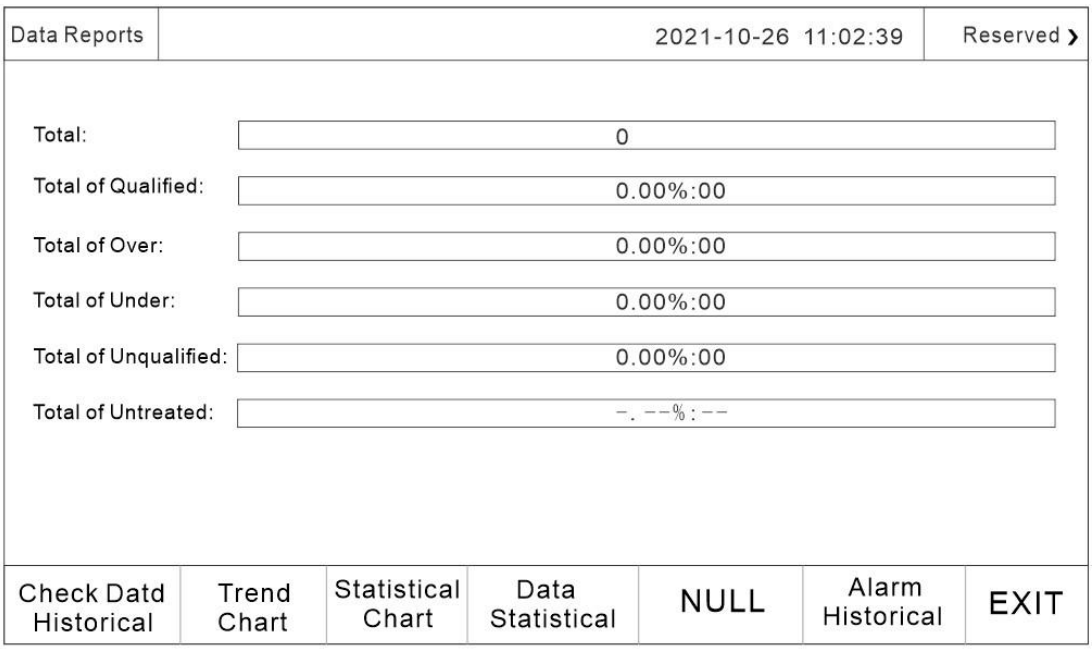

Figure 4-4 Example of the statistical chart interface

5. Quantity of switches

5.1 I/O I/O testing

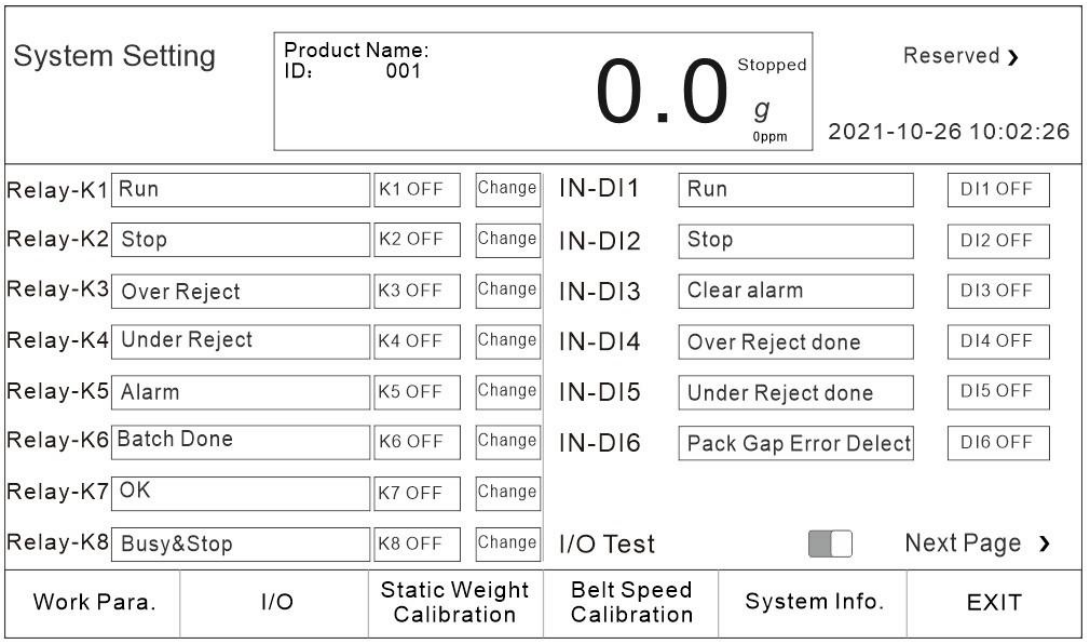

Figure 5-1 I/O parameter screen Example 1

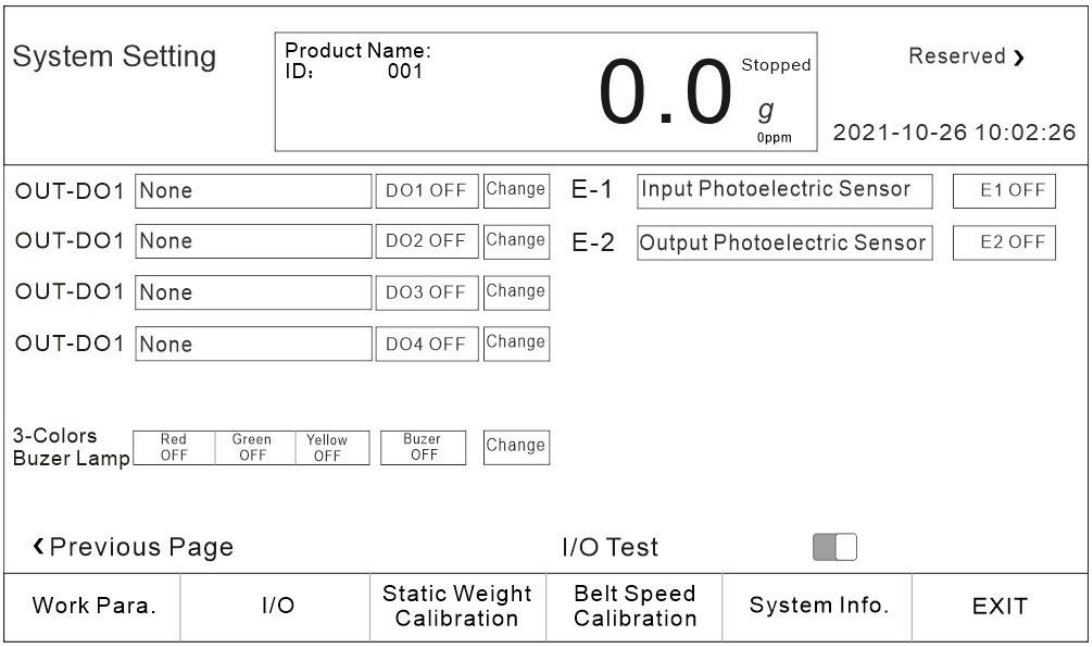

Figure 5-2 I/O parameter screen example 2

Click "Switch quantity" on the setting page to enter the IO test interface. The system provides 6 input terminals and 12 output terminals, which users can decide whether to use according to production requirements.For specific operation methods, please refer to "Operation Instructions on Buttons and Operation Frames" in Section 3.3.2.

IO test is to test whether the IO port is properly connected to the external device. During the test, click "Switch" after the output to output 1-8. If the corresponding relay coil is closed (red indicator light on the relay base) and the corresponding device is in action, the connection is normal and the output point of the weighing scale is valid; otherwise, please check whether the connection between the output point and the device is correct;Click the "switch" behind the three-color light, if the three-color indicator light is on, the connection is correct.

The input test can be carried out by setting the low level signal (DC0V) at the input end. If the low level signal is effective at the corresponding input port, the test indicator box behind the corresponding input point ON the touch screen will light up and display "ON" (The photoelectric input can be blocked on the main interface when testing the photoelectric input, if the corresponding input and discharge marks are lit up, the photoelectric input is effective).The input and output signals can be defined by themselves.

The default switching quantity is defined as follows:

Enter the port number	Definition	Output port number	Definition
DI1	Run	Relay - K1	Run
DI2	Stop	Relay - K2	Stop
DI3	Clear alarm	Relay - K3	Out-of-error culling
DI4	Aberration culling complete	Relay - K4	Undercount culling
DI5	Owe culling complete	Relay - K5	Alarm
DI6	Packet detection	Relay - K6	Number of batches completed
E1	I1 (incoming photoelectric sensor)	Relay - K7	Qualified indication

E2	I2 (discharge photoelectric sensor)	Relay - K8	Disqualified cull
		DO 1	Undefined
		DO 2	Undefined
		DO 3	Undefined
		DO 4	Undefined
		L 1	O17 (Buzzer alarm output)
		L 2	O7 (alarm light out-of-tolerance indication, no relay)
		L 3	O10 (alarm light qualified indication, no relay)
		L 4	O6 (alarm light undererror indication, no relay)

List of definable switching quantities:

Enter switch quantity:

Number	Name	Function description
I00	Undefined	No function when this item is selected.
I01	Input photoelectric	When the input is valid, it means that the input photoelectric sensor has sensed the measured object
I02	Output photoelectric	When the input is valid, it means that the output photoelectric sensor has sensed the object under test
I03	Run	When the input is valid, the device will boot into the running state
I04	Stop	The device will stop running when the input is valid
I05	Clear alarm	When the input is valid, the device will clear the current alarm
I06	Aberration cull complete	When the input is valid, the offset cull is complete
I07	Owe culling	When the input is valid, the underbalance culling has been

	complete	completed
I08	Packet detection	When the input is valid, the device performs packet connection detection
I09	Belt speed detection	
I10	Run/stop [level]	Control device operation or stop by level signal
I11	Run/stop [edge]	When the device is in the stopped state, the signal input is effective, the device starts to enter the running state; When the signal input is effective, the device stops running;
I12	Stop (level)	Valid when an object is detected entering the infeed in external input mode
I13	Infeed External Input Signal	When input is active, indicates product passes through metal detection probe
I14	Outfeed External Input Signal	Valid when an object is detected exiting the outfeed in external input mode
I15	CCD Pass Signal	Valid when a qualified CCD signal is received
I16	CCD Fail Signal	Valid when a non-qualified CCD signal is received
I17	Speed Detection	Reserved temporarily for compatibility with other models
I18	Metal Detector Photoelectric Input	Valid when the measured object passes the metal detector probe
I19	Metal Alarm Status	Valid when foreign metal is detected in the measured object
I20	Metal Detector Running Status	Valid when the metal detector probe is operating normally
I21	Barcode Scan Input	Valid to trigger one barcode recognition
I22	Product Tracking Reset	Valid to reset product tracking
I23	Stack Detection	Valid when the reject bin is full and unqualified products

		need to be removed promptly
I24	Forward Checkweighing Signal	When active, indicates forward incoming material, and the motor needs to run forward
I25	Reverse Checkweighing Signal	When active, indicates reverse incoming material, and the motor needs to run in reverse
I26	Low Air Pressure Signal	When active, indicates low air pressure
I27	Electrical Box Closed Signal	When inactive, indicates the electrical box door is not closed

Output switching quantity:

Number	Name	Function description
O00	Undefined	No function when this item is selected.
O01	Out-of-tolerance indication	If the weight check result is out of tolerance, the output is valid and continues until the next weight check is completed.
O02	Owe indication	If the weight check result is underweight, the output is valid and lasts until the next weight check is completed.
O03	Run	Run status output is valid.
O04	Stop	The stopped state output is valid.
O05	Alarm	Output is valid when alarming.
O06	Out-of-order culling	The weight check result is out of tolerance, according to the set out of tolerance eliminator distance delay, and then according to the set duration output valid.
O07	Owe culling	The weight check result is the undererror, according to the set offset culler distance delay, and then according to the set duration output valid.
O08	Disqualified culling	The weight inspection result is out of tolerance or undertolerance, according to the set distance delay of the unqualified eliminator, and then according to the set

		duration output effective.
O09	Number of batches completed	This output is valid when the set number of batches is reached.
O10	Qualifying instructions	If the weight check result is underweight, the output is valid and continues until the next weight check is completed.
O11	Busy Stop + communication	When the system is in busy state, busy detection is valid, this output is invalid, busy state is invalid and communication command is received, this output is valid, busy detection is invalid, this output is valid
O12	Busy stop	When the system is in busy state, busy detection is valid and this output is invalid, busy state is invalid, this output is valid, busy detection is invalid, this output is valid
O13	Feed photoelectric output	According to the state of the input photoelectric output, the input photoelectric effective, then the output effective.
O14	Discharge photoelectric output	According to the state output of discharge photoelectric, discharge photoelectric is effective, then the output is effective.
O15	Speed up pulse	Servo feedback function
O16	Deceleration pulse	Servo feedback function
O17	Buzzer alarm output	Output in different ways depending on your choice
O18	Qualified Reject	When the weighing result is qualified, output becomes valid after a delay set for the qualified rejector distance, lasting for the set duration
O19	Object Pending Removal	Indicates that material is present on the weighing platform and waiting to be removed
O20	Belt Run Output	Controls the start and stop of the belt
O21	Waiting for CCD Input	When valid, indicates that CCD signals can be received

O22	Material Stop Plate Output Indicator	When valid, the discharge baffle rises to intercept material
O23	Metal Detector Start	Start Metal Detector
O24	Metal Detector Stop	Stop Metal Detector
O25	Metal Detector Reject	When metal detection fails, output valid signals after the set rejection distance delay and preset duration
O26	Metal Detector Reject Indicator	Metal Detector Reject Indicator Output
O27	Unqualified Indicator	Output indicator for weighing failure
O28	Barcode Unqualified Reject	When the barcode is unqualified, output becomes valid after a delay set for the barcode rejector distance, lasting for the set duration
O29	Belt Reverse Output	When the signal is valid, the belt rotates in the reverse direction
O30	Reject Box Full	Output signal when the reject box is full
O31	Checkweighing Status Indicator	Output signal for checkweighing status
O32	Belt Forward Rotation Output	Signal indicating the belt is rotating forward

6. Working parameters

6.1 Working parameter Settings

Click "Set" to enter the interface of working parameters, and the user can decide whether to open according to the production needs. If the corresponding alarm is generated after opening, the weight checking scale will automatically alarm or alarm stop. It needs to manually click "clear alarm" or input the signal of "clear alarm" to start the weight checking again (after the alarm is generated and until the clear alarm is completed, The motor of the check weighing scale runs but does not determine whether the object is on or off the weighing platform, nor does it carry out weighing operation), and the alarm information is stored in "Data" - "Alarm information".For specific operation methods, please refer to "Operation Instructions of Button and Operation Frame" in section 3.3.2.

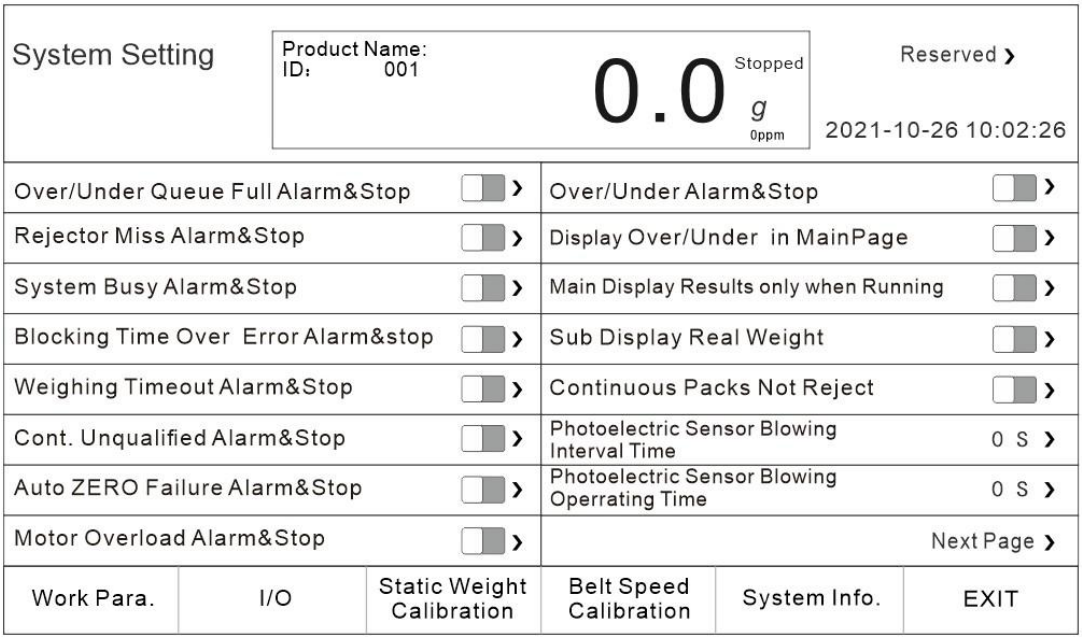

Figure 6-1 Working parameters screen example

Analysis of working parameters:

Name	Instructions
The alarm stops when the queue is full	The default number of over/under error queue is 20, which means that if the removal distance is long enough, that is, it takes a long time for the products to be removed to arrive at the removal institution, there can be more than 20 products in the middle. If there are more than or equal to 20 over/under error products to be removed in this distance, it will alarm and

	stop
If not eliminated in time, the alarm will be stopped	After the next unqualified product has gone through the reinspection process, the last product has not been removed, the alarm will be stopped
Busy alarm stop	In the last product has not been out of the inspection belt, the next product into the inspection belt, it will show busy alarm and stop.If the back end is connected with an over and under error elimination mechanism, the default is over error elimination
The time of overplugging will alarm and stop the machine	Indicates that if the discharge photoelectric induction continues, and exceeds the plugging time set in the system parameter interface, it will alarm and stop
If the maximum time on the scale is exceeded, it will alarm and stop	There are two kinds of action;1. If the maximum time on the scale set on the touch screen is more than 2 times of the time required for the object to pass the scale, the maximum alarm time on the scale is twice of the time required for the object to pass the scale. 2. If the maximum time on the weighing platform set on the touch screen is less than or equal to twice the time required for the object to pass the weighing platform, the maximum alarm time on the weighing platform is the maximum time on the weighing platform set on the touch screen
The number of consecutive unqualified alarms	The number of consecutive failed alarms
The number of super continuous disconformance alarm stops	In the product parameter setting interface, you can set the alarm number of continuous nonconformance. If the set value is not zero and the switch is on, the number of continuous nonconformance will alarm and stop when it reaches this value
Upper limit of motor	The maximum load the motor can withstand

load	
Stop above the motor load limit	The upper limit of motor load can be set in the system parameter interface of the product. When the weight of the product or the object to be weighed exceeds the set upper limit, it will alarm and stop
Overweight or underweight alarm and stop	Display on the main page that the result of this test product is out of tolerance or under tolerance and the device will stop.If you need to use this function, you need to move forward the discharge photoelectric position, please contact our technical department for details
Total Batch Stop Switch	When enabled, the machine stops after the total batch count is reached
Qualified Batch Stop Switch	When enabled, the machine stops after the qualified batch count is reached
Low Air Pressure Stop Switch	When enabled, the machine stops when air pressure is low
Electrical Box Door Open Stop Switch	When enabled, the machine stops when the electrical box door is open
Metal Detection Fail Stop Switch	When enabled, the machine stops upon metal detection failure
The main page displays the information of overshoot and undershoot	On the main page, it shows that the result of this test is out of tolerance, under tolerance, or qualified
The main page will display only the weight	Only the product weight test result of this test is displayed on the main page

test result	
Auxiliary display of real-time weight	Display the detected real-time product weight on the main page
Units	g/kg/t Optional
Minimum indexing	0.001. 0.002. 0.005. 0.010. 0.020. 0.050 Optional
Check scale for stability range	When calibrating the scale, the weight variation range is judged to be stable within this setting value
Judge the range of stability;	During the stabilization time, the range of weight variation is judged to be stable within this setting value
Zero tracking range	Weight value within this range, automatically clear zero
Clear range	The range at which the scale table is zeroed out during weighing
Automatic zeroing at startup	Perform zero clearing once the scale platform is started
Check the maximum judgment time of the scale	Is the longest judgment time in the process of weight calibration, indicating that the weighing platform must be stable and the zero voltage must be within the limited range during the calibration of the empty weighing platform and the weight calibration process. If the above conditions are not met and the maximum judgment time is exceeded, the alarm will be given and the weighing will fail
Decimal point	0 0.0 0.00 0.000 0.0000 Optional
Maximum range	600g
Check scale for stability time	When checking the scale, the range of weight variation is judged to be stable within the stability range of the scale

Stabilizing time	Within this setting, the range of weight variation is judged to be stable within the range of stability
Zero tracking time	During this time, the system data drift does not exceed the zero tracking range
The system automatically clears zeros after power-on	Zero clearing operation will be performed once on the scale platform
Feed to shake time	Do not sample during this time after feeding
Time to remove shaking from material	Do not sample during this time before discharging
Length of scale table	310mm
Maximum time on the scale table	Maximum time an item is on the scale
Material blocking time	From the discharge photoelectric induction to the material time, more than this time alarm
Dynamic zero clearance range	Range of zeroing of the weighing platform during the weight checking process
Digital filtering level	0 to 9 can be set
Pre-filter grade	0 to 20 optional
Time between photoelectric dust removal	When the system runs to the set value, the photoelectric dust removal begins
Duration of photoelectric dust	The output time of the photoelectric dust removal switch

removal	
Buzzer buzzer type	There are four types to choose from, which are undererror, out-of-error, unqualified, and qualified
Buzzer sounding mode	There are three ways to choose from, long buzzer, off, and delay
Buzzer delay time	The delay time is 0.000-10.000S
When the overgap is not suspended, the pop-up window will alarm	When the overgap is not suspended, the pop-up window displays the alarm information
The over and under alarm is included in the alarm record	The over and under alarm is included in the alarm record
Startup Abnormality Alarm Popup	Activate this switch to enable abnormal startup alarm popup
Steady-State Filter Switch	Enable steady-state filtering function via this switch
Infeed Photoelectric Timeout Detection Switch	This switch activates infeed photoelectric timeout detection
Outfeed Photoelectric Timeout Detection Switch	This switch enables outfeed photoelectric timeout monitoring
Timeout Detection Interval	Configure timeout detection interval (Range: 0.1-10s)

Dual-Side Rejection Switch	This switch activates dual-side rejection mechanism
Strict Busy Stop Switch	When enabled, the busy stop will not be activated until the weight goes below the zero zone.
Material Start Switch	When enabled, if the infeed mode is photoelectric, weighing will proceed even if the weight is above the zero zone at startup.
Checkweighing Mode	0: Dynamic checkweighing 1: Static checkweighing
Object Infeed Mode	0: Photoelectric 1: Zero zone mode For static checkweighing, also includes: 2: External input mode
Object Outfeed Mode	0: Photoelectric 1: Zero zone mode For static checkweighing, also includes: 2: External input mode 3: Delay mode 4: Photoelectric & Zero zone 5: Photoelectric | Zero zone | External
Object Infeed Delay	In static checkweighing, the delay time for the belt to stop after the object is in place.
Infeed Stabilization Time	In static checkweighing, the stabilization time for filtering after the belt stops.
Static Checkweighing Sampling Time	In static checkweighing, the sampling time used for weight calculation.
Object Outfeed Delay	In static checkweighing, the interval from object outfeed to belt startup.
Automatic Outfeed for	In static checkweighing, automatically outfeed OK products after sampling regardless of outfeed mode (except manual

OK Products	feeding).
Manual Add/Remove Material	In static checkweighing, enables manual feeding mode when weight is unqualified.
Outfeed Only After OK for Add/Remove Material	When enabled, manual feeding mode exits only after sampling weight is qualified.
Manual Add/Remove Auto Sampling Switch	When enabled, automatically re-sample if weight stabilizes beyond stabilization time during manual feeding.
Auto Outfeed OK After Add/Remove Switch	When enabled, automatically outfeed after delay if manual add/remove result is OK.
Discharge Photoelectric Valid Disable Belt Switch	When enabled, belt operation is prohibited if discharge photoelectric input is valid.
Discharge Baffle Retract Delay	Delay time for discharge baffle to reset after material leaves discharge photoelectric sensor.
Metal Detector Mode Select Switch	Four modes: Off, Metal Detector at Infeed, Metal Detector at Weighing, Metal Detector at Infeed without Photoelectric.
Metal Detector Front Distance	Distance from metal detector photoelectric to metal detector front end.
Metal Detector Rear Distance	Distance from metal detector photoelectric to metal detector rear end. Increase to expand detection range if metal signal is delayed.
Metal Detector Signal Delay Distance	Signal transmission delay distance. For infeed metal detection, usually set to distance from metal detector to infeed photoelectric; 0 for weighing metal detection.

Bottle Clamp Configuration	Three options: None, Single Control, Dual Control.
Bottle Straightener Configuration	Three options: None, Single Control, Dual Control.
CCD Detection Switch	When enabled, special checkweighing logic based on CCD signals.
Belt Reverse Switch	When enabled, belt reverses briefly after static checkweighing (for specific motors only).
Inverter Type	Two options: Mitsubishi, ABB.
Belt Reverse Time	Range: 0–10 s
Product Tracking Switch	Enables product tracking function.
Product Tracking Offset	Difference between moving average and standard weight.
Average Count	Number of items used to calculate moving average.
Product Tracking Positive Deviation Limit	Upper limit of product tracking offset; alarm at 80% of limit.
Product Tracking Negative Deviation Limit	Lower limit of product tracking offset; alarm at 80% of limit.
Product Tracking Overlimit Alarm Popup Switch	Enables popup alarm for product tracking overlimit.
Scan Function Switch	Master switch for barcode scanning.

Barcode Type	Select 1: EAN-13, 2: Code-128, 3: Standard QRCode.
Barcode Character Offset	Length of barcode data to remove.
Barcode Character Length	Length of barcode data to extract.
Trigger Delay	Delay from front photoelectric trigger to C01 sending capture signal to scanner.
Scanner Photoelectric to Exit Distance	Distance from scanner photoelectric to exit photoelectric (mm).
Auto Product Switch Switch	When enabled, switches product by recognized barcode; rejects unrecognized codes.
Barcode Recognition Time	Time from scan signal to receiving barcode data.
Barcode Information	Barcode reading status.
Abnormal Barcode Reject Distance	Reject distance for unrecognized barcodes.
Abnormal Barcode Reject Action Time	Reject action duration for unrecognized barcodes.
Inkjet Function Switch	Master switch for inkjet printing.
Remote IP	IP address of remote device for data transmission.
Remote Port Number	Port number of remote device.
Total Data Segments	Number of user-defined frame segments.

Weight Format	0: Raw weight without decimal or unit 1: Weight with decimal, no unit 2: Weight with decimal and unit
Result Interval Format	0: Numeric 1: English 2: Chinese
Date Format	0: YYYY-MM-DD 1: YYYY/MM/DD 2: MM/DD/YYYY 3: YYYYMMDD
Time Format	0: HH:MM:SS 1: HH-MM-SS 2: 32-bit Unix timestamp (s) 3: 64-bit Unix timestamp (ms)
Output Mode Select	0: Send after each checkweighing 1: Send continuously at set interval
Data Segment 1–16	User-defined custom data.
Template Select	0–3: Blank, Domino, Markem-Imaje, Videojet checkweighing print templates.
Sampling During Delayed Discharge	Whether to sample weight during delayed discharge.
Delayed Discharge Distance	Delay distance for checkweighing result after triggering discharge photoelectric. 0 = no delay. If too long, force result when leaving discharge photoelectric.

7. Communication

The product has RS485 and optional network port for external communication. The communication protocol is standard Modbus RTU, and the network port communication includes Modbus TCP/IP and HTTP.When the communication mode is printed, RS485 can be connected to the printer for printing output.For detailed operation methods, refer to "Operation Instructions on Buttons and Operation Frames" in section 3.3.2.

7.1 Communication parameters

Click "Setting" to enter the interface of working parameters, and then click the next page, the user can set the relevant serial port communication mode, to realize the communication between the weighing scale and the host computer and other external control units or connect the printer.

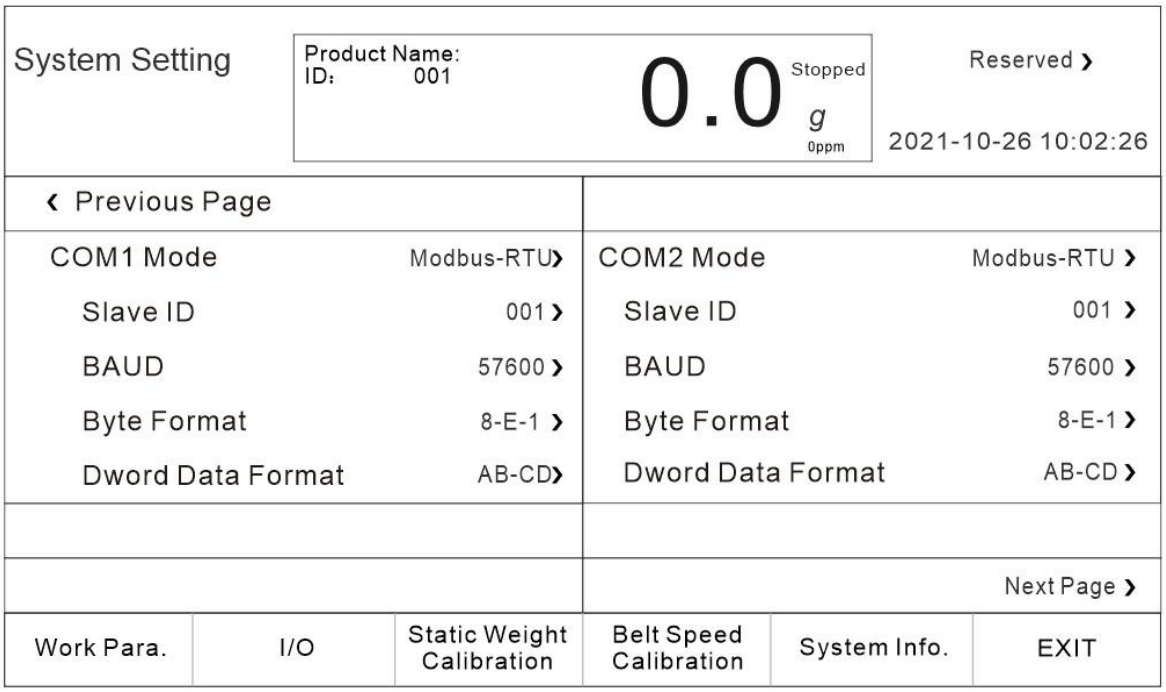

Figure 7-1 Communication parameters interface Example 1

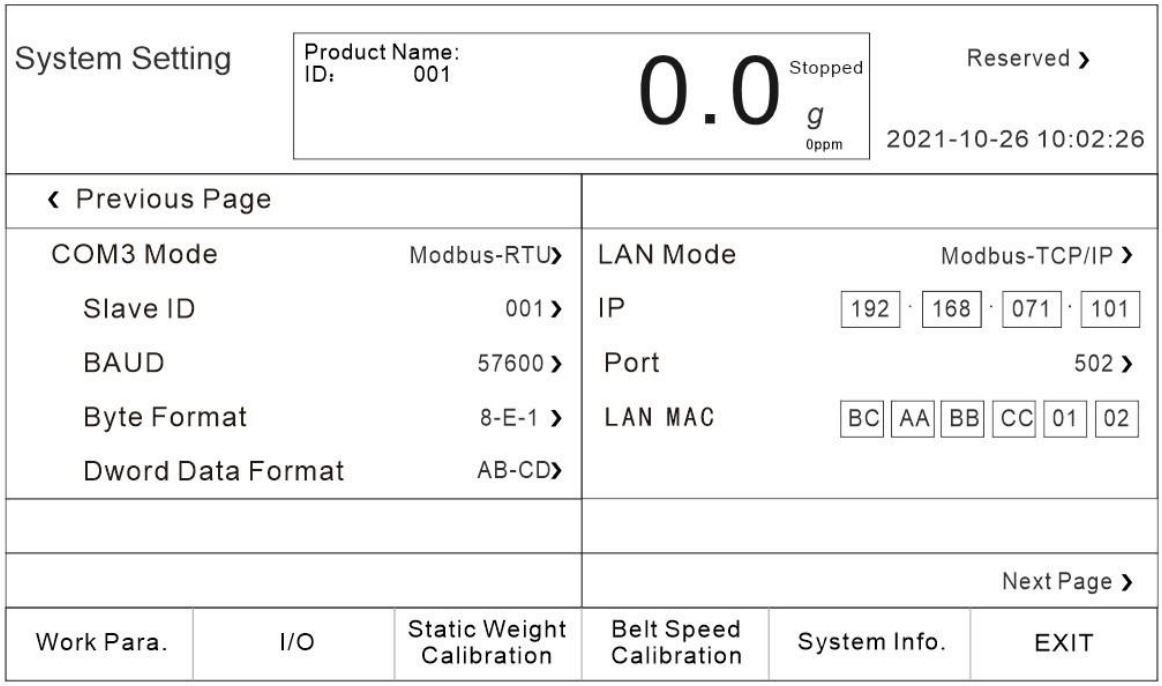

Figure 7-2 Communication parameters screen Example 2

7.2 Set the parameters of the servo driver

P0101----1 Speed Control Mode

P0102----0 Direction; set to 1 for reverse

P4101----1 Internal Multi-speed

P5401----2 External IO Switching Operation

P0004----1&2&3 Communication Address (1 for Infeed Section, 2 for Checkweighing Section, 3 for Discharge Section)

P0005----1 Baud Rate 9600

P0006----1 Communication Format 8-E-1

P6001----1 Enable (IO) Input 1

P6002----1 Power-on Enable

PA000----030

PA015----1&2&3, station number (input segment set to 1, duplicate detection segment set to 2, output segment set to 3)

PA016----0022

PA500----0100

PA502----0010

8. Program upgrade

The device can upgrade the motherboard program and touch screen program through the way of U disk.For details, please refer to "Operation Instructions on Buttons and Operation Frames" in section 3.3.2.

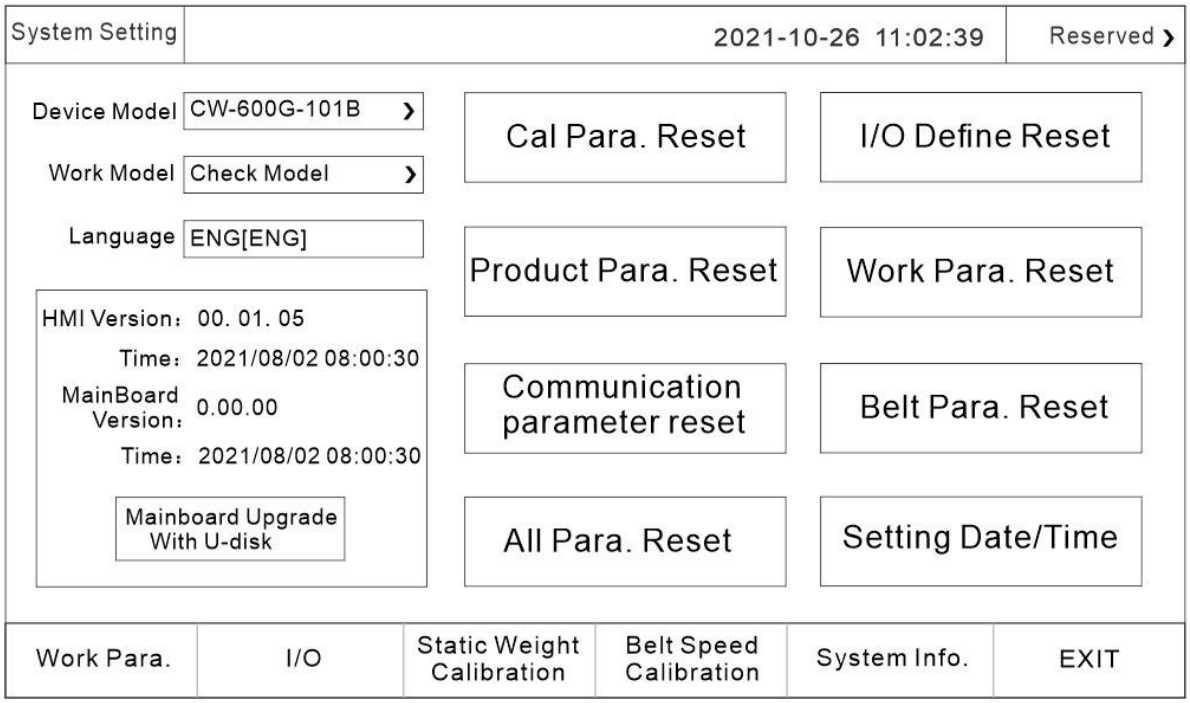

Figure 8-1 System Information screen example

After contacting our technical department, confirm that it is necessary to upgrade the program of the motherboard or touch screen.Obtain the corresponding program upgrade package first.Insert the USB flash drive with the upgrade package, click the "USB flash Drive Upgrade Controller" button to enter the upgrade interface, and perform the corresponding program upgrade according to the interface instructions.It is suggested to upgrade the program of the equipment under the guidance of our technical personnel, so as to avoid equipment failure or damage.

9. Size

When the equipment is installed on site, it is necessary to ensure that there is no contact between the weighing table and the surrounding area to avoid affecting the normal weighing. The distance between the surrounding area of the weighing table should be greater than 10mm.

9.1 Outline size drawing (unit: mm)

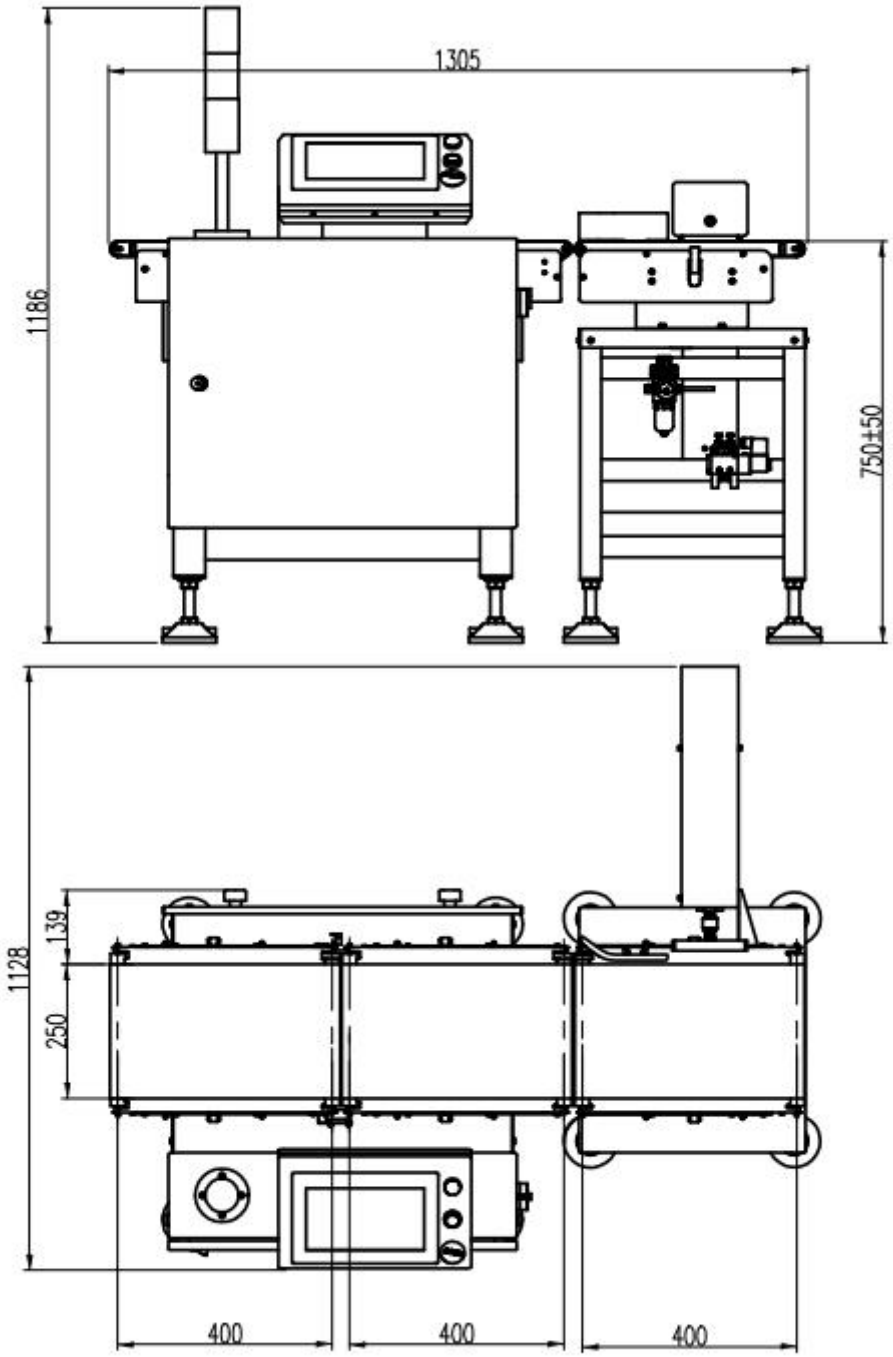

Outline Dimensional Drawing of Low Box Version

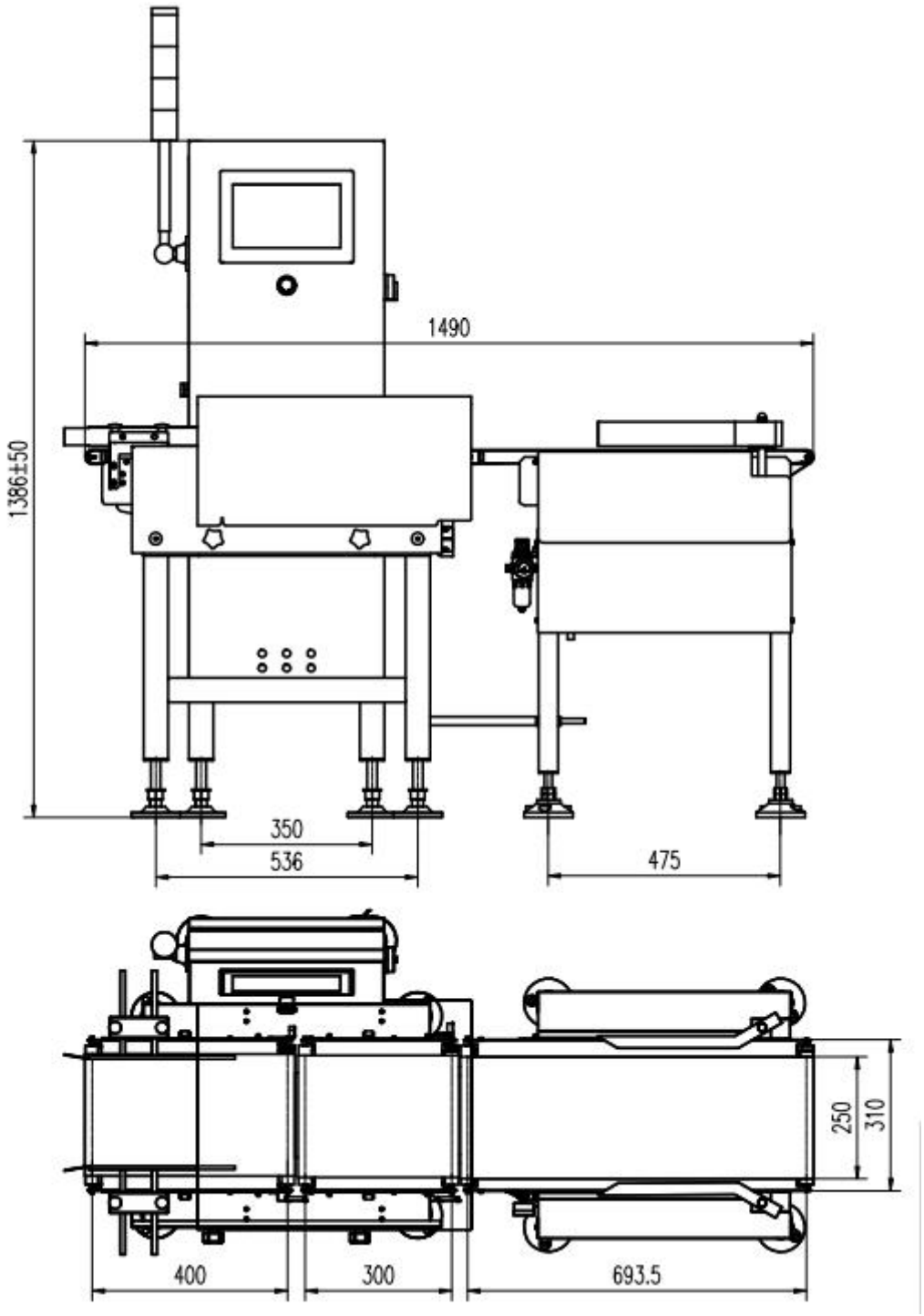

Outline Dimensional Drawing of High Box Version

*** Note: The width, length and height of the scale stand of non-standard customized products may be different from that of the standard products. For**

details, please refer to the technical documents or drawings confirmed by the user.

10. Equipment repair and maintenance

10.1 Maintenance of motors

10.1.1 Routine maintenance

- Keep the motor clean and prevent oil, water and other dirt from entering the motor.
- Check motor terminal bolts and motor base fixing bolts for loosening
- Check the rotation of the motor blades
- Check whether the bearings at both ends of the motor have oil leakage and other phenomena
- Pay attention to observe whether there is abnormal noise, vibration and special smell in the operation of the motor.

10.1.2 Regular maintenance

- For normal operation of the motor, the mechanic and maintenance electrician shall carry out the maintenance once a year.
- Remove dust or debris inside the motor (be careful not to damage the winding of the motor
- Check whether the rotor of the motor is flexible and replace the wearing parts (bearings, etc.)
- Check the insulation resistance of the motor windings to the ground. When the insulation resistance is below 0.5MΩ, the motor must be dried.
- Replace the grease.
- Check whether the no-load current is within the specified range

10.1.3 Precautions

- In the process of maintenance, attention should be paid to the safety of electricity and mechanical transmission, and illegal operation is strictly prohibited.
- When installing the repaired or replaced motor, attention should be paid to the wiring mode, and attention should be paid to whether the motor rotation direction is consistent with the reality.
- After installation, the motor should be clicked, and pay attention to observe whether the motor runs normally.

10.2 Check the failure cause and treatment method of weight scale

10.2.1 No display on the touch screen

- Method of Handling poor Power contact Connect the power cable
- Loose or falling data cable treatment method Connect the data cable

10.2.2 Data pulsation large, abnormal fluctuation

- Handling Method for loose screws of the heavy machine pedestal Tighten the

screws of the heavy machine pedestal

- The sensor is obviously disturbed, such as air conditioning, air flow, etc. Disposal method to get rid of external interference
- Ground shaking, vibration, such as nearby machine rotation interference, cars passing by, etc.Treatment methods to get rid of external interference
- The conveyer belt is affected by viscous objects
- Sensor base has debris accumulation or stuck processing method to get rid of external interference
- Filter coefficient set too small processing method to increase the filter coefficient

10.2.3 The display is always zero

- The object is light and the weight falls in the zero range. The treatment should be resolved by resetting the "zero range".
- Device trace to zero. The handling method can be solved by adjusting the "automatic zero tracking" item in the calibration option of the system.
- The sensor data cable is loose, and the contact is not good. Solution Connect the sensor data cable properly

10.2.4 Abnormal data display

- The error is too large. Handling Method Recalibrate the scale.
- Product number selection error. The handling method should be resolved by clicking "Switch Product" again and selecting the corresponding companion product number.
- The ambient temperature exceeds the normal operating range of the sensor. Ensure that the ambient temperature is normal
- Aging or deformation of sensor components. Solution Replace the sensor

10.2.5 Busy alarm

- After the object into the material is not out of the weighing platform, and there are objects on the weighing platform. Handling Method Adjust the feeding speed, the material out of the weighing platform before allowing the next material on the weighing platform.

10.2.6 Packaging error

- Remove too many unqualified products in time. Handling method Eliminate unqualified products in time.

10.2.7 Continuous nonconformity alarm

- The number of consecutive disqualifications exceeding the set value.Alarm prompt, no need to deal with the weight check work normally.

10.2.8 Excess plugging time

- During operation, the object stays too long at the feeding or discharging end. Solution Check the reason for the object staying time is too long and deal with it in time.

10.2.9 Below the minimum sampling time

- The object is coming off the scale too quickly in operation. Adjust the speed of the belt of the weighing table within the detectable range.

10.2.10 Super maximum sampling time

- Long period of time when the object in operation is not off the scale. Check the reason why the object is not out of the weighing table for a long time and deal with it in time.

10.2.11 Overload motor load limit

- The weight of the object exceeds the maximum range by a certain amount (exceeds the maximum weight of the motor). Handling Methods Do not weigh objects beyond the maximum range.

10.2.12 Automatic zeroing failed

- 1. The current weight is out of the zero clearance range.
- 2. The scale is unstable.Treatment Method 1 Empty the scale table 2 Make sure the scale is stable